SOLUTIONS

446 N. Main St Barnegat, NJ 08005

973-294-4790

www.trafficcontrolsolutions.com

- WORK GLOVES
- HI-VIZ APPAREL
- TRAFFIC SAFETY
- NETTING & TIES
- MATERIAL HANDLING
- FALL PROTECTION
- CLEANING SUPPLIES
- HEAD PROTECTION
- EYE PROTECTION
- RESPIRATORY PROTECTION
- FIRST AID KITS
- RAIN GEAR
- FIRE EXTINGUISHER
- INDUSTRIAL SAFETY SIGNS
- BODY PROTECTION

WORK GLOVES | SAFETY APPAREL | TRAFFIC SAFETY | MATERIAL HANDLING
RESPIRATORY PROTECTION | HEAD PROTECTION | FALL PROTECTION

BETTER GRIP®

Premium Grade Cowhide Leather Palm Work Gloves

3 pairs / pack | 72 pairs / case

Split cowhide leather palm | Rubberized safety cuff wrist | Jersey Liner | 10.5"

BGBYHVO

BGBYHVG

BGBY22D | BGBY220 | BGBY22Y

BETTER GRIP®

Premium Grade Cowhide Leather Welding Work Gloves

1 pairs / pack | 36 pairs / case

Split cowhide leather palm | Rubberized safety cuff wrist | Jersey Liner |

BGBYWELD2 | BGBYWELD1

BETTER GRIP®

Orange Fluorescent PVC Gloves

3 pairs / pack | 72 pairs / case

BG105ORG

Chemical Resistant | Sandy Finished | Safety Cuff | Jersey Liner

BETTER GRIP®

Orange Fluorescent PVC Gloves

3 pairs / pack | 72 pairs / case

BG105ORGKW

Chemical Resistant | Sandy Finished | Knit Wrist | Jersey Liner

BETTER GRIP®

BLK/YEL PVC Gloves

3 pairs / pack | 72 pairs / case

BG105BLK/YEL

Chemical Resistant | Sandy Finished | Safety Cuff | Jersey Liner

BETTER GRIP®

Blue Nitrile PVC Gloves

3 pairs / pack | 72 pairs / case

BG105NITRILE

Chemical Resistant | Blue Nitrile PVC coating | Knit Wrist | Jersey Liner

BETTER GRIP®

Raised Finish Monkey Grip Jersey Gloves

BG23173

Chemical Resistant | Raised Finished | Safety Cuff | Jersey Liner

BETTER GRIP®

Premium Double Coated PVC Cold Resistant Snow Blower Insulated Gloves

Double Dipped Oil Resistant PVC Coating
Waterproof and Anti-Oil
One Size Fit Most
Length : 25 inch

BG26PVC-BLU

BETTER GRIP®

Premium Double Coated PVC

Cold Resistant Snow Blower Insulated Gloves

Doulbe Dipped Oil Resistant PVC Coating
Waterproof and Anti-Oil
Size : Large
Length : 12 inch
6 pairs / pack 72 pairs / case

Insulated Seamless Acrylic Liner

New ✓ BG12WINTER-OR

BG12WINTER-BL

BETTER GRIP®

Chemical Resistant Gloves PVC

Chemical Resistant Gloves
Waterproof and Anti-Oil
Size : Large
Length : 18 inch
6 pairs / pack 72 pairs / case

BG18PVC

BETTER GRIP®

Latex Chemical Resistant Gloves

Chemical Resistant Gloves
Acid and Abrasion Resistance
Waterproof and Anti-Oil
Size : XLarge
Length : 18 inch
6 pairs / pack 72 pairs / case

BG18RUB

BETTER GRIP® Sandy Finished

PVC Gloves - 3 Liners

Full Coated PVC
Waterproof and Anti-Oil
Fluorescent Orange PVC Glove
3 Layers Jersey Liner 6 pairs / pack 72 pairs / case

Item	Color	SIZE	QTY		
BG12ORG	ORG	12"	3 PAIRS/ PACK	24 PACK/ CASE	72 PAIRS
BG14ORG	ORG	14"	3 PAIRS/ PACK	24 PACK/ CASE	72 PAIRS

BG12ORG (12")
BG14ORG (14")
3 pairs / pack 72 pairs / case

WORK GLOVES ALL PURPOSE GLOVES

BIG JACK LEATHER PALM GLOVE

BGBY4YL (LG) BGBY4YXL (X-LG)
Premium Grade Leather | Cowhide Leather Palm | Safety cuff | Lining

BETTER GRIP®

Premium Grade Cowhide Leather Palm Insulated Gloves

6 pairs / pack 72 pairs / case

BGBY4GDL (LG) BGBY4GDXL (X-LG)
Premium Grade Leather | Cowhide Leather Palm | Safety cuff | Lining

BGBY4OL (LG) BGBY4OXL (X-LG)
Premium Grade Leather | Cowhide Leather Palm | Safety cuff | Lining

BGBY6GDL (LG) BGBY6GDXL (X-LG)
Premium Grade Leather | Cowhide Leather Driver Gloves | Safety cuff | Lining

BETTER GRIP®

Premium Driver Gloves, 10.5 - Inches, Slip-On Cuff

6 pairs / pack 72 pairs / case

Item	Leather Type	Sizes	Lining	Qty
BGBY7PLL	Pig Skin Leather	LG	✓	6 DZ/ CASE 72 PAIRS
BGBY7PLXL	Pig Skin Leather	XL	✓	6 DZ/ CASE 72 PAIRS
BGBY9CLL-1	Cowhide Leather	LG		6 DZ/ CASE 72 PAIRS
BGBY9CLXL1	Cowhide Leather	XL		6 DZ/ CASE 72 PAIRS
BGBY8CLL-1	Cowhide Leather	LG	✓	6 DZ/ CASE 72 PAIRS
BGBY8CLXL-1	Cowhide Leather	XL	✓	6 DZ/ CASE 72 PAIRS

Nitro Max Powder-Free Nitrile Exam Gloves - 5 mil

100 gloves/bx | 10 bx / case

Total Max Hi-Risk Powder-Free Latex Gloves - 15 mil

50 gloves/bx | 10 bx / case

Item	SIZE	MIL
2086	S	5mil
2087	M	5mil
2088	L	5mil
2089	XL	5mil

Made with 100% nitrile to alleviate the potential for adverse reactions associated with latex protein, NitroMax still provides the protection, comfort, fit, and sensitivity of a latex glove.

Item	SIZE	MIL
4599	S	15mil
4600	M	15mil
4601	L	15mil
4602	XL	15mil

Total Max Hi-Risk 15 mil blue latex gloves are extra-thick, making them ideal for emergency services, health professionals, police, and technicians. Manufactured from premium exam grade latex, chlorinated

Emerald 6X Nitrile Black Exam Gloves- 6 mil

100 gloves/bx | 10 bx / case

Emerald Grip Powder Free Latex Gloves -8 mil

100 gloves/bx | 10 bx / case

Item	SIZE	MIL
6100	S	6 mil
6101	M	6 mil
6102	L	6 mil
6103	XL	6 mil
6104	2XL	6 mil

These heavy duty 6 Mil nitrile gloves are perfect for tough jobs. Their sleek black color makes them the preferred nitrile glove for everything from automotive to tattoo use. The non-latex formula features powder-free finish and exam grade level protection.

Item	SIZE	MIL
6801	S	8 mil
6802	M	8 mil
6803	L	8 mil
6804	XL	8 mil

Emerald Professional Protection Products proudly presents Emerald GRIP. Durable high-risk latex .These heavy-duty 8 mil latex gloves are ideal for automotive, safety and laboratory use.

Nitro Max Black Nitrile Exam Gloves - 5 mil

100 gloves/bx | 10 bx / case

Emerald Shannon Powder-Free Vinyl Gloves - 4 mil

100 gloves/bx | 10 bx / case

Item	SIZE	MIL
1082	S	5 mil
1083	M	5 mil
1084	L	5 mil
1085	XL	5 mil

Made with 100% nitrile to alleviate the potential for adverse reactions associated with latex protein, NitroMax still provides the protection, comfort, fit, and sensitivity of a latex glove. This product utilizes soft and durable nitrile formulation for improved elasticity and greater comfort.

Item	SIZE	MIL
VN9705	S	5 mil
VN9706	M	5 mil
VN9707	L	5 mil
VN9708	XL	5 mil

powder-free vinyl, developed specifically for industrial and institutional use. The non-latex formula makes this glove ideal for those who may be allergic to latex. Manufactured to meet exacting user specifications.

Gladiator Powder-Free Latex Exam Gloves -10 mil

100 gloves/bx | 10 bx / case

Happy Hands Powder-Free Latex Gloves - 4 mil

100 gloves/bx | 10 bx / case

Item	SIZE	MIL
8930	M	10 mil
8931	L	10 mil
8932	XL	10 mil

provide exceptional balance of performance, comfort, and all-over texture for enhanced wet and dry gripping. Thicker and more durable than typical exam latex gloves, the Gladiator is the strongest yet! Now 10 mil for added protection

Item	SIZE	MIL
HH800	S	4 mil
HH801	M	4 mil
HH802	L	4 mil
HH803	XL	4 mil

Made from natural rubber latex, offering formfitting comfort and fingertip dexterity. An offline manufacturing process gives the glove a low AQL (pinholes), and superiority over normal general purpose, B-grade gloves.

RK Safety Taehwa Red Rubber Gloves

100 Pairs | Case

RK-THRG

Made in Korea, for kitchen & home rubber gloves.Long lasting, sturdy, strong rubber gloves for kitchen & home. Quality comparison test approved. long cuff to protect your arms from water.

Available Size: M | L | XL

ATLAS**FIT300BLUE**

ATLAS**FIT300BLACK**

Atlas FIT 300 Latex Coated Gloves

12 pairs / pack 144 pairs / case

Atlas XTRA 305 extra deep dipped Rubber coated gloves

12 pairs / pack 144 pairs / case

ATLAS**XTRA305**

451

Atlas FIT Therma Latex Coated Gloves

12 pairs / pack 144 pairs / case

340

Atlas Opti Grip 341 Latex Coated Gloves

12pairs /pack 144 pairs / case

ATLAS**370**

Atlas FIT 370 Nitrile Gloves

12 pairs / pack 144 pairs / case

ATLAS**B0500B**

Atlas FIT B0500B Polyurethane Palm Coated Gloves

12 pairs / pack 144 pairs / case

Atlas ARX 772-LARGE 26-Inch Long Sleeve Nitrile Coated Cotton Lined Work Gloves

ATLAS**ARX772L**

SHOWA

SRUS**3082** SRUS**3081**

ANSI/ISEA 107-2010 Class 3
Hi Viz Safety T-Shirts
Short / Long Sleeve

50 pcs / case

ANSI CLASS 3

SRUS**L9092** SRUS**L9091**

Available sizes:

S	M	L	XL	2XL	3XL	4XL	5XL

BFSS**511** BFSS**512** BFLS**711** BFLS**712**

ANSI CLASS 3

ANSI/ISEA 107-2015 Hi Viz Safety T-Shirts
Short / long Sleeve - Black Bottom

50 pcs / case

ANSI/ISEA Class 3 certified . 2in. wide reflective taping on front and back.
Left chest pocket for pens and notes

Available sizes:

S	M	L	XL	2XL	3XL	4XL	5XL

RK Safety Hi Viz Safety T-Shirts
ANSI/ISEA 107-2015 Class 3

50 pcs case

BFS T-5511

BFS T-5512

RK Safety Hi Viz Safety T-Shirts
ANSI/ISEA 107-2015 Class 3

BFL T-5711

BFL T-5712

NY Hi-Viz Workwear High-Visibility Force Color Enhanced Safety Shirt

Short / Long Sleeve

Jersey: 100% Polyester
Pockets: One left chest front pocket.
Machine Wash
Force Color Enhanced
OSHA Friendly

50 pcs case

Available sizes:

S	M	L	XL	2XL	3XL

S3111 S3110

L2111 L2110

100% POLYESTER

NEW YORK HI-VIZ WORKWEAR

RK Safety Hi Viz Safety Vest
ANSI/ISEA 107-2015 Class 2

RK-P5511

RK-P5512

M8512

M8511

ANSI/ISEA 107-2015 Class 2
Hi Viz Safety Vest

50 pcs case

Available sizes: S | M | L | XL | 2XL | 3XL | 4XL | 5XL

SRUSS9812

SRUSS9811

ANSI/ISEA 107-2015 Class 2
Hi Viz Safety Vest

50 pcs case

INTERIOR POCKETS ON BOTH SIDES

Available sizes: S | M | L | XL | 2XL | 3XL | 4XL | 5XL

SAZ8212

SAZ8211

ANSI/ISEA 107-2015 Class 2
Hi Viz Safety Vest

50 pcs case

Available sizes:
One Size Fits All

P6612

P6611

ANSI/ISEA 107-2015 Class 2
Hi Viz Safety Vest

24 pcs case

Available sizes: S | M | L | XL | 2XL | 3XL

BGERED

BGEBLU

BGEGBLU

BGEGBLK

BGEBBLK

PGERED

BETTER GRIP® Double Dipped Latex Palm Gloves

8 pairs / pack | 240 pairs / case

- Natural 10 gauge poly/cotton blend
- Machine knit Light weight Economical
- Double Dipped Latex coated palm and fingers to improve grip, increase abrasion and wet resistance

Item	Color	QTY		
BGERED	Red	8 PAIRS/PACK	30 PACK/CASE	240 PAIRS
BGEREDM (Medium Size)	Red	8 PAIRS/PACK	30 PACK/CASE	240 PAIRS
BGEBLU	Blue/White	8 PAIRS/PACK	30 PACK/CASE	240 PAIRS
BGEGBLU	Blue/Grey	8 PAIRS/PACK	30 PACK/CASE	240 PAIRS
BGEGBLK	Black/Grey	8 PAIRS/PACK	30 PACK/CASE	240 PAIRS
BGEBBLK	Black	8 PAIRS/PACK	30 PACK/CASE	240 PAIRS
PGERED	Red	8 PAIRS/PACK	30 PACK/CASE	240 PAIRS

RK SAFETY Z7411, Z7412
High Visibility Safety Vest ANSI/ ISEA

50 pcs case

Available sizes: S | M | L | XL | 2XL | 3XL | 4XL | 5XL

RK Safety SV6511, SV6512
Traffic Emergency Safety Vest

50 pcs case

Available sizes: S | M | L | XL | 2XL | 3XL | 4XL

SV6511

SV6512

RK Safety Hi Visibility Kids Safety Vest, Hi-Vis Waistcoat | Kids Outdoor Play, School Trips, Costume Play, Skating, Biking Vest

100 pcs case

Perfect for Biking, Outdoor Play, School Trips, Costume Play, Skating and evening activities
'PLEASE SLOW DOWN WE LOVE OUR CHILDREN' printed on the back
The children's vests are identical to the adult version and they are made with the same safety materials as the adult vest, only sized for children
100% Polyester Fabric and 2-Inch Reflective Strips on both front and back for safety | Front Velcro Fastener

AVAILABLE SIZES :

Small (Fits ages 3 to 7 years)
Medium (Fits ages 8 to 11 years)

2 Inch Reflective Strips

KIDS777-LM

KIDS777-OR

KIDS777-PINK

RK Safety Class 3 Two Tones

50 pcs case

High Visibility Reflective Strips Breathable Ployester Mesh Vest W/ Pockets | ANSI ISEA 107-2015

ANSI Class 3 compliant, Meets ANSI/ISEA:107-2015
Lightweight, breathable mesh for air circulation & faster drying Zipper front closure
Two lower outside patch pockets with flaps, chest pocket on both sides
2 vertical and 1 horizontal reflective strips with 2" width on both front and back for maximum visibility

MV7812

MV7811

ECONOMICAL MESH VEST
2" Reflective Strips (50 pcs case)

-Breathable polyester mesh
-Contrasting reflective striping for day/night visibility.
-Velcro front closure
-One Size Fits the Most
-100% Polyester

8011 8012 8013

Safety PK0430 ANSI/ISEA Class 2 Certified
Female Safety Vest (Pink) (50 pcs case)

ANSI Class 2 compliant, Meets ANSI/ISEA-107-2019
Lightweight, breathable 100% polyester tafeta fabric for air circulation & faster drying
Zipper front closure
2 vertical and 2 horizontal reflective strips with 2" width on both front and back for maximum visibility

Available sizes:

S	M	L	XL	2XL	3XL

PKU430

CONTRACTOR MESH VEST with ID Pocket (50 pcs case)
SECURITY MESH VEST with ID Pocket (50 pcs case)

8002 8004 8001 8003

RK Safety Sun Shade Hat
With Reflective Stripe and Neck Shield

RKHNSUM-1 RKHNSOR-1

Hi - Vis Hats with Neck Shades
OFA (100 pcs case)
GREEN CAP / YELLOW CAP

Green/Orange

Safety Hard Hat Neck Shield
Helmet Sun Shade HI-VIS w/ Reflective Stripes (120 pcs case)

SUNSHADE

RK High Visibility Reflective Bands
Hi Viz Safety Gear for Running, Biking, Walking
Running Bracelets, Armbands, Wrist Bands

Package Quantity: 4 bands in a pack
Knit elastic bands features 360° sherre flective tape.
Arm/Ankle Bands: 18.5" wide with a 1/8" reflective silver stripe
8" Velcro strip allows size to be adjusted from as small as 6.5" circumference up to 16.5" circumference.
Total length: 15 3/4

4 pcs pack

RKHVBAND

RK BALACLAVA
HEAD WEAR - fleece lined, OFA (120 pcs case)

WG30L WJ30B

H8312 H8311

Available sizes:

S	M	L	XL	2XL	3XL	4XL	5XL

ANSI CLASS 3

ANSI/ISEA 107 Class 3 Compliant Hi Viz Safety Hooded Pullover
(10 pcs case)

ANSI/ISEA 107 Class 3 Compliant Sweatshirts
Hooded
Black rib cuffing
Polyester Material
2" Silver Reflective Tape
9.0 oz, 100% polyester
Black bottom enhances worker's appearance
left & right lower front slash pockets

H9012 H9011

Available sizes:

S	M	L	XL	2XL	3XL	4XL	5XL

ANSI CLASS 3

ANSI/ISEA 107 Class 3 Hi Viz Safety Hooded Full Zip Sweatshirt
(10 pcs case)

ANSI/ISEA 107 Class 3 Compliant Sweatshirts
Thermal Knit Lining
Black rib cuffing
Polyester Material
2" Silver Reflective Tape
Zipper Closure

2 Colors to Choose from: Bright Lime and Bright Orange

H6612 H6611

Available sizes:

S	M	L	XL	2XL	3XL	4XL	5XL

Thermal Lining

ANSI CLASS 3

HI VIZ THERMAL LINED ANSI Class 3 High Visibility Class 3 Sweatshirt, Full Zip Hooded
(10 pcs case)

100% Polyester
Imported
Machine Wash
Zipper front hood
2 inch reflective tape
Thermal Lined ***

H70012

Available sizes:

S	M	L	XL	2XL	3XL	4XL	5XL

ANSI CLASS 3

ANSI/ISEA 107 Class 3 Hi Viz Safety Hooded Full Zip Sweatshirt
(10 pcs case)

ANSI/ISEA 107 Class 3 Compliant Sweatshirts
Thermal Knit Lining
Black rib cuffing
Polyester Material
2" Silver Reflective Tape and X Pattern back
Zipper Closure

2 Colors to Choose from: Bright Lime and Bright Orange

WJX9012

Available sizes:

S	M	L	XL	2XL	3XL	4XL	5XL

HI VIZ FLEECE LINED BOMBER JACKET
ANSI/ISEA Class 3 8 pcs case

- 100% polyester shell, 100% polyester quilted lining
- 8000MM waterproof rating
- 2"-wide reflective taping on front, arms, and X pattern back
- Meets ANSI Class 3 standards
- Snap-off adjustable hood
- Waterproof welded sleeve pocket
- Interior MP3/radio pocket

RK Safety New York Hi-Viz Workwear WJX7012 Men's ANSI Class 3 High Visibility Waterproof Safety Jacket with X pattern

SRUS WJ9012

SRUS WJ9011

Available sizes:

S	M	L	XL	2XL	3XL	4XL	5XL

HI VIZ FLEECE LINED BOMBER JACKET
ANSI/ISEA Class 3 8 pcs case

- 100% polyester shell, 100% polyester quilted lining
- 8000MM waterproof rating
- 2"-wide reflective taping on front, back and arms
- Meets ANSI Class 3 standards
- Snap-off adjustable hood
- Waterproof welded sleeve pocket
- Interior MP3/radio pocket

J8512

J8511

Available sizes:

S	M	L	XL	2XL	3XL	4XL	5XL

Hi-Viz Workwear High Visibility Safety Bomber Jacket With Zipper, PVC Pocket, Black Bottom
ANSI/ISEA Class 3 8 pcs case

ANSI/ISEA 107 Class 3 Bomber Jacket
Waterproof Jacket with 2 Inch Reflective Tapes High Visibility
Qualited 300D PU Coated Oxford Material: 300 Denier,
High Load Bearing Capacity, Abrasion and Impact Resistance,
Resistance to Water, Oil, Grease
Comfortable Pockets: One Chest Cellphone Pocket,
PVC Pockets, Pencil Bag on Left Sleeve, Cap with Button
280GSM Polar Fleece: Napped Insulating Lightweight Soft Fabric

RK Hi Visibility Fluorescent 9 - Inch Cone Set 200 pcs case

Feature :
- Hi Visibility Fluorescent plastic cones - set of 10
- Set of 10 colors : Blue, Green, Purple, Red, Yellow and Orange.

PURPLE RED YELLOW BLUE ORANGE GREEN

RK PVC Traffic Safety Cone, Orange, Yellow, Blue and Green 12-Inch

Premium grade PVC construction assures flexible yet rugged durability
Its high visibility provides the user with ultimate conversion of light
12-Inch Height

CONE12YYELLOW CONE12LLIME CONE12WWHITE CONE12OORANGE CONE12BBLUE

RK PVC Traffic Safety Cone, Yellow and Blue 18-Inch

Premium grade PVC construction assures flexible yet rugged durability
This PVC cone is maintenance free, won't fade or crack
18 inch height 3 lb weight

CONE18Y-YELLOW CONE18B-BLUE

RK PVC Traffic Safety Cone, Orange and Lime 18-Inch

Premium grade PVC construction assures flexible yet rugged durability
Its high visibility provides the user with ultimate conversion of light
18-Inch Height 2.2 lb weight

CONE18OW CONE18LW

RK PVC Traffic Safety Cone, Orange 18-Inch

Premium grade PVC construction assures flexible yet rugged durability
This PVC cone is maintenance free, won't fade or crack
18 inch height 3 lb weight

CONE18O CONE18O1T

RK PVC Traffic Safety Cone, Lime 18-Inch

Premium grade PVC construction assures flexible yet rugged durability
This PVC cone is maintenance free, won't fade or crack
18 inch height 3 lb weight

CONE18L CONE18L1T

RK PVC Traffic Safety Cone, Blue, White and Yellow 18-Inch

Premium grade PVC construction assures flexible yet rugged durability
This PVC cone is maintenance free, won't fade or crack
18 inch height 1.5 lb weight

CONE18BW CONE18WH CONE18YW

CONE18BW1T CONE18WH1T CONE18YW1T

RK PVC Traffic Safety Cone, Orange and Lime 36-Inch

Premium grade PVC construction assures flexible yet rugged durability
This PVC cone is maintenance free, won't fade or crack
36 inch height 10 lb weight

CONE36O CONE36O2T CONE36L CONE36L2T

CONE18OW1T CONE28OW CONE28OW1T CONE28OW2T

CONE36OW CONE36OW2T

RK Orange Safety Traffic PVC Cones, Orange Base

-Premium grade PVC construction assures flexible yet rugged durability.
-Its high visibility provides the user with ultimate conversion of light.
-Available sizes: 18", 28" and 36".

RK PVC Traffic Safety Cone, Orange 28-Inch

Premium grade PVC construction assures flexible yet rugged durability
This PVC cone is maintenance free, won't fade or crack
28 inch height 7 lb weight

CONE28O

CONE28OIT

CONE28O2T

RK PVC Traffic Safety Cone, Lime 28-Inch

Premium grade PVC construction assures flexible yet rugged durability
This PVC cone is maintenance free, won't fade or crack
28 inch height 7 lb weight

CONE28L

CONE28LIT

CONE28L2T

RK PVC Traffic Safety Cone, Blue 28-Inch

Premium grade PVC construction assures flexible yet rugged durability
This PVC cone is maintenance free, won't fade or crack
36 inch height 6.4 lb weight

CONE28B

CONE28BIT

CONE28B2T

TRAFFIC SAFETY

RK 28 Inch Collapsible Traffic Multi Purpose Pop up Reflective Safety Cone

Waterproof Fabric and PP Base — 10 pcs case

RK 15 Inch Collapsible Traffic Multi Purpose Pop up Reflective Sfaety Cone

Waterproof Fabric and PP Base — 20 pcs case

CONECC28

CONECC115

RK PVC Traffic Safety Cone, Orange 6-Inch

CONEO6

RK 20 Inch Orange Marker Cones, Slotted

20 pcs case

CONEWC

RK REFLATAPE 4 and 6 Inch

Traffic Cone Collar Replacement Reflective Tapes

For 28"

REFLTAPE6 : 6" Hi Intensive tape 9.44 X 14.44 X 6 Inch
REFLTAPE4 : 4" Hi Intensive tape 16 X 19.2 X 4 Inch

For 36"

REFLTAPE6 : 6" Hi Intensive tape 10.2 X 14.17 X 6 Inch
REFLTAPE4 : 4" Hi Intensive tape 15.74 X 18.5X 4 Inch

RK Polyethylene Portable Delineator Post with 13 lbs Recycled Octagonal Rubber Base, 42" Height, Orange and White

10pcs case

- 42" in height
- Made of flexible low density polyethylene
- 6 Kg (13 lbs) Octagonal Rubber base
- UV Inhibitors to minimize fading
- Meets Federal MUTCD standards

DPOSTZTBASE

DPOST28 DPOSTZTBL DPOSTZTLM DPOSTZT-OR DPOSTZT-WH DPOSTZT-YEL

RK Traffic PVC Retractable Cone Bars

Engineer grade reflective sheeting ensures maximum visibility day or night. Effectiveness Compared to warning tape, the Cone-Bar is highly effective in terms of both cost and functionality.

Item	Color	DIM.	Qty.
CBAROW7	ORG/ WHT	2" OD x 53.84"	30 pcs/ cs
CBAROW10	ORG/ WHT	2" OD x 70-120"	20 pcs/ cs
CBARYB7	BLK/ YELLOW	2" OD x 53.84"	20 pcs/ cs
CBARYB10	BLK/ YELLOW	2" OD x 70-120"	20 pcs/ cs

RK Premium 03-10-3WAY6V Polycarbonate Barricade Light, 2-sided Visibility, Photocell, UV Coated

12pcs case

- Color: Amber
- Dia.: 7
- Snap-lock case and breakaway LED and moisture proof circuit
- LED light (4000 hours operate)

BLIGHT6V

RK Safety BLIGHT-ST Solar Rechargeable Barricade Amber LED Warning Lights

12 pcs case

Environmentally Friendly Solar Rechargeable
3-Way Operation: Steady On, Flashing, or Off
Most durable & efficient barricade light on the market
Includes 3-way switch, tamperproof bolt
Efficient LED optic lens produces 30% more light output

BLIGHT-ST

RK Safety BLIGHT 4D Barricade LED Warning Lights Operated by 4 D size Cell

12 pcs case

BLIGHT4D-1

RK LED Police Light

RK-PLIGHT

WLIGHT YW RD

Easy Installation - NoWiring, Just Fix the Bracket on the Place Where you want, Switch "ON"
Eco Friendly - No Battery Need, Solar Powered, Rechargeable, LED
Multi Functional Usage - Traffic Construction, Crane Tower, Car Accident, Gardening, House.

Solar Rechargeable

WLIGHT-ST-RD

Solar Rechargeable

WLIGHT-ST-YW

Made in Korea String Knit Red Palm Latex Dipped Gloves

WRGKR300

8 pairs / pack 240 pairs / case
10 pairs / pack 300 pairs / case

- Natural 10 gauge poly/cotton blend
- Machine knit Light weight Economical
- Latex coated palm and fingers to improve grip
- Increase abrasion and wet resistance

Made in Korea White Poly Cotton String Knit Work Gloves

WCGKR

8 pairs / pack 240 pairs / case
10 pairs / pack 300 pairs / case

- Natural 10 gauge poly/cotton blend
- Machine knit Light weight Economical
- Made in Korea

Item	QTY		
WCGKR240	8 PAIRS/PACK	30 PACK/CASE	240 PARIS
WCGKR300 W/B	10 PAIRS/PACK	30 PACK/CASE	300 PARIS

Made in Korea String Knit Latex Dipped Gloves, Double Dipped

WBGKR300W/B

10 pairs / pack 300 pairs / case

WDBGKR240W/B

8 pairs / pack 240 pairs / case

WGDGKR300W/B

10 pairs / pack 300 pairs / case

- Natural 10 gauge poly/cotton blend
- Machine knit Light weight Economical
- Double Dipped Latex coated palm and fingers to improve grip, increase abrasion and wet resistance
- Made in Korea

Item	Color	QTY		
WDBGKR240 W/B	Dark Blue	8 PAIRS/PACK	30 PACK/CASE	240 PARIS
WGDGKR300 W/B	Yellow/Green	10 PAIRS/PACK	30 PACK/CASE	300 PARIS
WBGKR300 W/B	Light Blue	10 PAIRS/PACK	30 PACK/CASE	300 PARIS

RKGC

Length: 5-Inch long
Keeps your gloves handy at all times
Interlocking teeth
Safety breakaway

3 pairs / pack 600 pairs / case

Item	Color	Length
RKGC-RE	Red	5 Inch
RKGC-OR	Orange	5 Inch
RKGC-YE	Yellow	5 Inch
RKGC-GR	Green	5 Inch
RKGC-BLU	Blue	5 Inch
RKGC-BL	Black	5 Inch

RK Traffic Wand Baton LED Flashlight with Wrist Strap

12 Red color LED with blinking and steady-glow modes
2 size available: 21- Inch and 16- Inch Traffic Wand (Overall Length)
Slip-resistant handle
Suitable for traffic control, construction site, climbing & camping contact.

BATTERN412C-BL

BATTERN412C-GN

BATTERN412C-YW

FLARE YW RD LED EMERGENCY ROADSIDE 2 BEACON FLARES KITS

High Perform Visibility Up to 3,000 Feet at Night
Last Longer and Easier to Use than hazard Lights
AAA Batteries, Solid Storage Case are Included
It has a Magnetic Base, so that it is Easy to Attach any Steel
Ultra Bright LED Light 360 Degrees
3 Reflective Tapes on the Beacon Barrel

RK-FLARE YW

RK-FLARE-RD

RK Water-Filled Expandable Barricade

- Expanda up to 8 FT
- Height :38 Inch
- Bottom Width : 15 Inch
- High visibility reflective tapes

RK Water-Filled Barrier (Red/White)

- Length: 5 ft
- Top Width: 0.6 ft
- Bottom Width : 1.2 ft
- Height: 2.63 ft
- Net Weight: 20 lbs
- Water Capacity: 551 lbs
- Colors: Red

Channelizer Drum Barricade:

- Drum is a minimum of 18" wide throughout its 36" height, regardless of orientation
- Two mounting holes for optional barricade lights
- 100% recycled rubber base for increased durability and "gripdon" which resists movement from passing vehicles
- NTPEP tested-meets or exceeds MUTCD specifications

RK Red/white Conspicuity Reflective Tape Roll, Dot Class 2

SRUS DOT TAPE

RK Signal Traffic Wand Baton LED Flashlight with Wrist Strap, Orange Finish

50 pcs case

- 12 Red color LED with blinking and steady-glow modes
- 2 size available: 21- Inch and 16- Inch Traffic Wand (Overall Length)
- Slip-resistant handle
- Suitable for traffic control, construction site, climbing & camping contact.
- 2x D Batteries required (Not included)

BATTERN412C BATTERN542D

RK Safety Orange Flag Size : 18" or 24"

100 pcs case

RKFLG-OR-1827

RKFLG-OR-2436

SIDE2418

MEN2418

RK Engineer Grade Reflective Signs, Aluminum 24" x 18"

20pcs case

- Engineer Grade Reflective Aluminum Sign
- 80 mil, 24" x 12"
- Made from rust resistant material
- Great for long-term outdoor use

-Both signs are made of Engineer Grade Reflective Aluminum

Item	Size	Material	Qty/ case
SIDE2418	24" x 18"	Engineer Grade Reflective Aluminum	20
MEN2418	24" x 18"	Engineer Grade Reflective Aluminum	20

RK High-Visibility Caution Barricade Tape, Yellow

- Non-adhesive and non-conductive vinyl
- Unrolls quickly, can be tied or tacked to posts, trees etc tear or cut to length.

Item	Type	Color	Dimension	Qty
SC31000	Caution	Yellow	3 x 1000'	8 rolls/ case
SC3300	Caution	Yellow	3 x 300'	16 rolls/ case
SD31000	Danger Do Not Enter	Red	3 x 1000'	8 rolls/ case
SD3300	Danger Do Not Enter	Red	3 x 300'	16 rolls/ case

RK DANGER DO NOT ENTER Barricade Tape, Red/ Black

RK LED Strobe Beacon Vehicle Warning Flashing Light with Magnetic Mount

- Double-flash strobe light produces 300 candela/sec brightness at 60 double FPM
- Quad-flash strobe light produces 400 candela/sec at 65 quad FPM
- Operates on 12-48 volt systems and draws .8 amps at 12 volts.
- Magnetic-mount model includes 12' coiled cord and plug with LED indicator.

Item	Color	Dimension	Qty
BCL1150-O	Orange	4.5 x 4.5"	12 / case
BCL1800-O	Orange	5.5 x 7"	
BCL1150R	Red	4.5 x 4.5"	12 / case
BCL1800R	Red	5.5 x 7"	

Road Side Emergency Kit w/ Warning Triangle

3 pcs / BOX | 4 boxes / case

- Triangle Warning Kit, Highway Rated, Includes Three Warning Triangles,
- Storage Box, Standards Meets FMVSS 125, SAE-W4-74DOT

WTLIGHT-ST

RK 4R25/ 6 Volt Lantern Battery

24 pcs | case

- 4R25/ 6 Volt
- 0 % Mercury & Cadmium
- Built to exceed performance demands of industrial applications

BAT6V

RK Rubber Curb Truck Parking Block

Great for use as a truck or bus parking stop
Heavy duty rubber parking block with reflective safety strips
Reduces damage to vehicles upon impact
Great for any weather condition on asphalt or concrete surfaces

Item	Description	Dim
RKBP22	Heavy duty rubber parking block with reflective safety strips. Reduces damage to vehicles upon impact.	22 x 5.86 x 4 in.
RKBP36		36 x 5.86 x 4 in.
RKBP72		72 x 5.86 x 4 in.

RKBP22

RKBP36

RKBP72

RK BP-237KIT 4-Piece Anchor Kit with Screws For Parking Stops

Length: 4-3/4" | Diameter: 1/2"
Compatible with All RK Parking Stops
Package Contains: 4 Anchors and 4 Screws

RK-BP237KIT

RK Loading Dock Rubber Curb Ramp, 4.5-Inch

- 4.5" rise ideal curb ramp for loading dock areas and uneven surfaces
- 32 Degree inclined approach angle, measures 16.5" L x 19" W x 4.5" overall
- 2 front Holes for permanent mounting application
- for indoor or outdoor use

RK-RCR19

RK Modular Rubber Speed Bump, 6 ft

L-72 "x W-12" x H-2" / Weight -37 lbs

2 pcs | case

RK-SH72

RK-SH72-END
Package Includes -1 End Cap (for RK-SH72)
Heavy Duty Rubber Construction with a Textured Surface
Rounded Edge for Easy Approach to Speed Bumps
L-12" x W-8" x H-2" / Weight -5 lbs

RK-SPIKE

RK-SPIKE

RK Portable Speed Hump

RK-PSH10

RK-WCR001 Solid Rubber Heavy Duty Wheel Chock

Approximate Size -10 1/8"(L) x 6" (H) x 11 5/8" (W)
Made from non-slip oil resistant rubber
Rubber Resists Tearing, Abrasion, Ozone weathering
Suitable for Use with Passenger Cars, Trucks, Vans and RV.
Weight -5 kg (11 lbs)

RK-WCR001

RK-WCR002 Solid Rubber Heavy Duty Wheel Chock with Handle

Approximate Size -8"(L) x 5.5"(H) x 4"(W)
Made from Non-slip Oil Resistant Rubber
Rubber Resists Tearing, Abrasion, Ozone weathering
Suitable for Use with Passenger Cars, Trucks, Vans and RV.
Weight -2 kg (5 lbs)

RK-WCR002

RK Modular Speed Hump

MIDDLE SECTION
RK - SH35

END SECTIONS
RK - SH35 - END

RK 2 Channels Big Hole Cable Cover

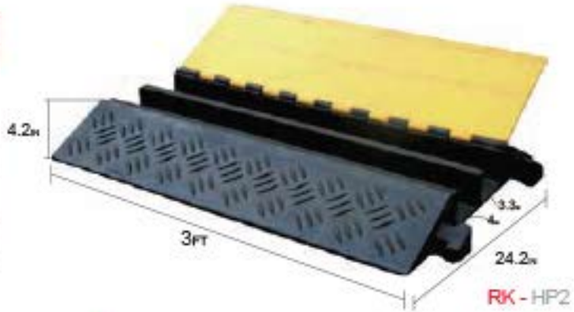

RK - HP2

RK 2 Channels Cable Protector 66,000 lbs Capacity

RK - CP2

RK 3 Channels Cable Protector 11,000 lbs Capacity

RK - CP3

RK 5 Channels Cable Protector 11,000 lbs Capacity

RK - CP5

RK 3 Channels Cable Protector Coner 45 Degree

RK-CP3-LF

RK 5 Channels Cable Protector Coner 45 Degree

RK-CP5-LF

TRAFFIC SAFETY

RK 2 Channel Cord Protector Cover Guard Cable Snake

RK-CR5

RK 3 Channel Cable/Hose Protector Ramp

RK-CR6

RK Safety 6.5 Feet in Length PVC Floor 3 Cord Protector

RK - CPR-BK

RK - CPR-GR

RK 39" Wall Bumper Guard with Reflective Yellow Strip

RK-WP4

RK Rubber Corner Guard

RK - RC1

RK Rubber Round Corner Guard

RK - RC2

RK-PCR27 Heavy Duty 1000 lbs Portable Curb Ramp for Hand truck, Delivery, Carts, Wheel charis

2pcs case

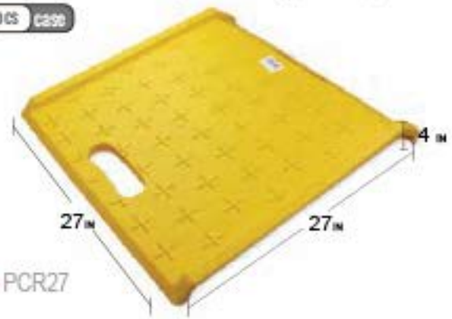

RK - PCR27

RK-PCR27	27X27X4(IN)	9(lbs)	YELLOW	PLASTIC

RK-RUP-8 Low Profile Threshold Ramp

1pcs case

RK - RUP-8

MODEL NO.	DEMENTION	WEIGHT	COLOR	MATERIAL
RK-RUP-8	42X24X2.5(IN)	35.27(lbs)	BLACK	RUBBER

TRAFFIC SAFETY

RK Solid Rubber Power Wheelchair Threshold Ramp

Doorway threshold ramp for 1", 1.5", 2", 2.5" rises
Great for power scooters, wheelchairs, walkers and foot traffic
Beveled edges for a smooth and gradual approach to and from raised surfaces
Slip-resistant surface and molded drain channels with a finished appeal
Durable all-weather solid rubber construction

Item	Length	Width	Heigh	Weight
RK-RTR01	43"	8"	1"	22 lbs
RK-RTR02	43"	13"	1.5"	22 lbs
RK-RTR03	43"	16"	2"	30 lbs
RK-RTR04	43"	16"	2.5"	35 lbs

RK - RTR01

RK - RTR02

RK - RTR03

RK - RTR04

RK - RTR05

RK - RTR06

Frequently Bought Together

RK Fire Extinguisher Sign 10x14 In

Fire extinguisher signs are printed fire red on a white background to meet the standards of **OSHA** Standards

PS 95926

ABC Dry Chemical

ABC Dry Chemical is a multipurpose extinguishing agent that is suitable for .use on Class A, Class B and Class C fires

Third Party Approvals For Peace Of Mind

LISTED LISTED DOT Compliant USCG Approved

Typical Uses: For public areas such as offices, classrooms, churches, parking garages, and hotel/motel assembly halls and guest areas. For businesses such as retail stores, light manufacturing facilities, research facilities, auto dealerships, vehicle/ aircraft/marine service centers, and manufacturing .processes such as painting, dipping, and coating
Not recommended for use on sensitive electronic equipment or aircraft structure

Model	2.5 ABC	5 ABC	10 TALL	20 S ABC
PLF Alum. Valve	13315	10914	11340	12120
PLF Brass Valve	N/A	10915	11341	12121
Agent Capacity	2.5 lb. (1.13 kg)	5 lb. (2.27 kg)	10 lb. (4.54 kg)	20 lb. (9.07 kg)
UL/ ULC Rating	1-A:10-B:C	3-A:40-B:c	4-A:80-B:C	10-A:120-B:C
Temperature Range	-65° to 120° F (-54° to 49 °C)			
Discharge Time	9 sec	14 sec	22 sec	27 sec
Discharge Range ft. (m)	9-15 (2.7-4.6)	12-18 (3.7-5.5)	15-21 (4.6-6.4)	15-21 (4.6-6.4)
Operating Pressure	100 psi (689 kPa)	195 psi (1344 kPa)	195 psi (1344 kPa)	195 psi (1344 kPa)
Mounting Type	Vehicle	Wall	Wall	Wall
USCG Approval	Type B:C Size I	Type A Size II Type B:C Size I	Type A Size II Type B:C Size II	Type A Size II Type B:C Size III
Ship Weight	5.5 lb (2.5 kg)	10 lb (4.5 kg)	18.25 lb (8.3 kg)	33.5 lb (15.2 kg)
Unit Height	14.75 in	16.375 in	21 in	21.25 in
Unit Width	4.875 in	7.25 in	7.75 in	8.75 in
Unit Diameter	3.375 in	4.25 in	5.125 in	7.5 in

WARNING SIGNS

PS 95926

PS 95924

PS 95925

Rounder edge with mounting holes in each corner.

Item	SIZE (Inches)	Mat.
PS 95924	10 x 14	Plastic
PS 95925	10 x 14	Plastic
PS 95926	10 x 14	Plastic

Fire extinguisher signs are printed fire red on a white background to meet the standards of **OSHA** Standards

Do not let people waste time looking for equipment in the midst of an emergency. Fire and emergency sign with directional arrow ensures that everyone know where your safety equipment is. Striped border enhances the visibility of sign.
• Arrow points the way instantly.

18 in. x 12 in. Aluminum Sign Vertical

- Aluminum material for use outdoors
- 1-sided
- Pole-mounting design
- Size: 18 x 12"

AL 95927

AL 1812 EGP-14

AL 95929

BETTER GRIP®

Nitrile Coated Knit Work Gloves

Available in Medium , Large and X-Large size

Oil Resistance | 360° Breathability | Optimize Grip

6 pairs / pack | 144 pairs / case

100% Nylon
Nitrile Coated Knit Gloves for wet and muddy gardening conditions
Fits like a second skin
Includes: pink, purple and green

BGSNITRILE - LM

BETTER GRIP®

Polyurethane Coated Knit Work Gloves

Available in Medium , Large and X-Large size

Knit wrist cuff | 360° Breathability | Optimize Grip

6 pairs / pack | 144 pairs / case

Seamless knit nylon shell offers increased comfort, finger dexterity and breathability
Polyurethane(PU) coatings offer great puncture and abrasion resistance while offering excellent tactile sensitivity
Knit Wrist helps prevent dirt and debris from entering the glove
Breathable back for comfort

BGSPU-BK

BGSPU-WH

BETTER GRIP®

Crinkle Latex Coated Palm Gloves

Available in Medium , Large and X-Large size

Cut Resistance | Tear Resistance | Optimize Grip | Abrasion Resistance

6 pairs / pack | 144 pairs / case

BGSCL-DB

BGSCL-OR

BGSCL-LM

18 in. x 12 in.
Plastic Sign Vertical

GD 8501

GLOW IN DARK

18 in. x 12 in.
Plastic Sign

GD 8500

GLOW IN DARK

24" Length x 18" Height

Engineer Grade Prismatic Reflective
Aluminum 0.080, Black On White

SIDE 2418

MEN 2418

Your safety message can alert everyone of hazardous conditions and keep them at a safe distance. Design is compliant with OSHA safety signage design standards.

- Reduce dangerous situations and accidents by making it obvious that the area is dangerous
- UV, chemical, abrasion and moisture resistant

Rounder edge with mounting holes in each corner.

Frequently Bought Together

UV Resistant, UL Recognized Nylon Cable Zip Ties, Black

PS 95916

PS 95917

PS 95927

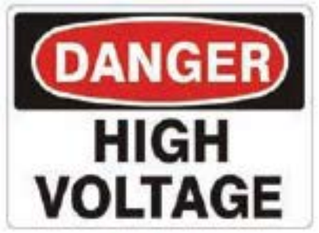

PS 95918

PS 95919

PS 95920

PS 95921

PS 95922

PS 95923

WARNING SIGNS

WARNING SIGNS

- 3M Engineer Grade Reflective
- 1-sided
- 10 x 14
- Eas_ to See
- 12 x 18

SIGN AL1812 EGP-12

SIGN AL1812 EGP-13

SIGN AL1812 EGP-11

SIGN AL1014 NON -11

SIGN AL0710 EGP -11

SIGN AL0710 EGP -12

SIGN AL0710 EGP -13

- Non reflective
  Double sides high temperature treated printing , backside in white blank
- 10x7

SIGN AL0612 EGP-11

- 3M EGP in white with black printing
- 6x12

RK Honey comb patent
Hi - Intensive Grade reflective material
STOP / SLOW PADDLE

ABS STOP/SLOW PADDLES
HAVE AN 80" HIGH STAFF FOR EASY HANDLING
AND ARE HIGHLY VISIBLE TO MOTORISTS ON THE ROAD.
THESE PADDLES COME IN ONE SIZE (24")

WHITE PVC HANDLE COMES IN THRREE PARTS

STSL24HIG
24" Size

STSLPIPE

HIGH - INTENSIVE GRADE

STSL18R
18" Size

- Made of UV-resistant plastic
Durable ABS plastic for use outdoors
- 1-sided
- Traffic cone signs are supplemental standard warnings and directions that create a safer work environment
- easy to see

CONE SIGN 11

CONE SIGN 12

CONE SIGN 13

CONE SIGN 14

CONE SIGN 15

CONE SIGN 16

CONE SIGN 17

CONE SIGN 18

CONE SIGN 19

CONE SIGN 20

CONE SIGN 21

CONE SIGN 22

CONE SIGN 23

TRAFFIC CLIP ON CONE SIGN

•Made of UV-resistant plastic
Durable ABS plastic for use outdoors
• 1-sided
• Traffic cone signs are supplemental standard warnings and directions that create a safer work environment
• easy to see

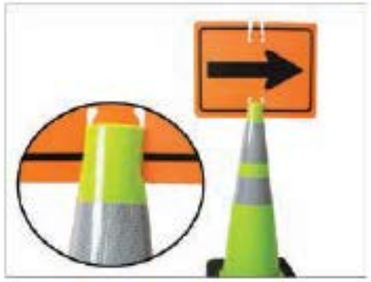

CONE SIGN 24

CONE SIGN 25

CONE SIGN 26

CONE SIGN 27

CONE SIGN 28

CONE SIGN 29

CONE SIGN 30

CONE SIGN 31

CONE SIGN 32

CONE SIGN 33

CONE SIGN 34

CONE SIGN 35

CONE SIGN 36

TRAFFIC CLIP ON CONE SIGN

•Made of UV-resistant plastic
Durable ABS plastic for use outdoors
• 1-sided
• Traffic cone signs are supplemental standard warnings and directions that create a safer work environment
• easy to see

CONE SIGN 37

CONE SIGN 38

CONE SIGN 39

CONE SIGN 40

SAFETY SIGNS

Non reflective
Double sides high temperature treated printing , backside in white blank 12X12

3M Engineer Grade Reflective
12X12

SIGN AL1212 EGP -13

SIGN AL1212 NON -12

SIGN AL1212 EGP -11

Made of UV-resistant plastic Durable ABS plastic for use outdoors 1-sided 36X24

MEN P3624

SIDE P3624

Safety Barrier Fence Finished Edge Orange 4 ft. x 100 ft.

RKF - 4100

- Control pedestrian and vehicle traffic around hazards.
- Use on construction sites, parking lots or warehouses.
- Easy installation and removal with T-posts or wooden stakes
- Bright and vibrant orange warning color

Heavy Duty Black Scaffold Debris Netting, Fire retardant

- Black Knitted Mesh Construction Safety Netting
- Polyethylene threads with reinforced border
- Fire retardant
- Stays flexible in cold weather
- Meets NYC Local Law 61 and OSHA specs

Heavy Duty Fire Retardant Vertical Safety Netting, High Visibility Orange and White

Heavy Duty UV Resistant, UL Recognized Nylon Cable Zip Ties, Black

Made from the highest quality nylon polymers, these intermediate cable ties have a tensile strength of 120 lbs. These black cable ties are available in packages of 100. The cable tie has an environmental temperature range of -40°F to 185°F (-40° C to 80°C).

- Environmental temperature range of -40°F to 185°F (-40° C to 80°C)
- Length: 12 inch Width: 7.5 mm (120lbs)
- Material: Nylon 66 (UL Recognized)/ UL Flammability: 94V.2

Item	Size	Tensile Strength	Qty	
ZT36200	3.6mm x 8"	40 lbs	100 pcs/ pack	150 pack/ cs
ZT36280	3.6mm x 11"	40 lbs	100 pcs/ pack	100 pack/ cs
ZT48200	4.8mm x 8"	50 lbs	100 pcs/ pack	100 pack/ cs
ZT48280	4.8mm x 11"	50 lbs	100 pcs/ pack	100 pack/ cs
ZT76300	7.6mm x12"	120 lbs	100 pcs/ pack	50 pack/ cs

RK BALL BUNGEE 40pcs case ENHANCED KNOT ★ ★ ★

Product Details : Heavy-Duty Ball Bungees are used to secure tarps to canopy frames or other fixed points. Also prolongs the life of tarps and gromets by allowing slight movement Reusable.

Item	Color	Bungee Length	Bungee Cord Dia.	Streches to	Nylon Ball Dia.
RKBB-25P-6BK	BLACK	6"	1/5-INCH	8.5-INCH	1-INCH
RKBB-25P-9BK	BLACK	9"	1/5-INCH	12.5-INCH	1-INCH
RKBB-25P-11BK	BLACK	11"	1/5-INCH	15.5-INCH	1-INCH
RKBB-25P-6WHT	WHITE	6"	1/5-INCH	8.5-INCH	1-INCH
RKBB-25P-9WHT	WHITE	9"	1/5-INCH	12.5-INCH	1-INCH
RKBB-25P-11WHT	WHITE	11"	1/5-INCH	15.5-INCH	1-INCH

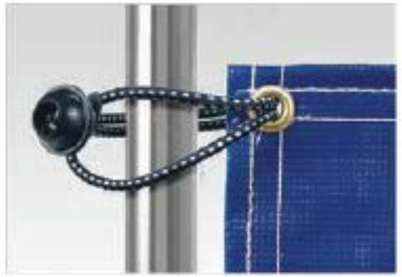

Heavy-Duty 3-In-1 Convertible Hand Truck HTA-3IN1

Item #	Description
HTA-3IN1	-52" high -Capacity 500 lbs. hand truck/1000 lbs. platform -Type 3 IN1 Convertible Hand Truck -Tire & Wheel Specs Pneumatic Air Tire

Heavy-Duty Appliance Hand Truck with Nose Extension HTS-APP

Item #	Description
HTS-APP	-60" high. -Capacity 600 lbs. -Type Appliance Hand Truck -Tire & Wheel Specs 6-Inch TPR Wheels

Steel HTS-4072GN Dual Handle Hand Truck with 8" Flat-Free Non Marking TPR Wheels, Green HTS-4072GN

Item #	Description
HTS 4072 GN	-48" height for large loads -550 LBS Capacity -Dual handle for easy load control -8.5" x 14" base plate

Heavy-Duty Narrow Aisle U-boat Platform Truck Dolly, 16x60 Steel Deck, 1800 Lbs. Capacity

- 1800 Lbs capacity
- Solid steel to ensure years of trouble free use
- Twin removable handles to enable handling of oversize loads
- Deck has diamond shaped rugged steel to prevent load from slipping off
- 360 degree steering!

BETTER GRIP® Dotted Gloves

8 pairs / pack 240 pairs / case

BGDOT

BETTER GRIP® Brown Jersey

6 pairs / pack 800 pairs / case

BGJERSEY

BETTER GRIP BGFL1-10X Polyester Foam Latex Coated Work Gloves (Flourescent

4 pairs / pack 144 pairs / case

BGFL1 Availablesizes : S | M | L | XL

BETTER GRIP® BGS-GN110X Women's Garden

Nitrile Coated Palm Work Gloves
100% Nylon
Nitrile Coated Knit Gloves for wet and muddy gardening conditions
Includes: pink, purple and green
Product contains bug repellent smells

Availablesizes : M | L | XL

6 pairs / pack 144 pairs / case

BGS - GN1

BETTER GRIP 1 pairs / pack 144 pairs / case

BGS-GNBB Bamboo Gardening Work Gloves with Nitrile Palm Glove (Green)

Availablesizes : S | M | L | XL ®

BGS - GNBB

BETTER GRIP 3 pairs / pack 144 pairs / case

BGFLEXMF Micron Foam Nitrile Coated Nylon Work Glove With Dots for Smart Phone

Availablesizes : S | M | L | XL

BGFLEXDOT-GY

Heavy-Duty Senior Aluminum 2-In-1 Convertible Hand Truck
HTA-7B

Item #	Description
HTA-7B	- 61" high - Capacity 500 lbs. hand truck 1000 lbs. platform - Type Convertible Hand Truck - Material Aluminum - Tire & Wheel Specs Pneumatic Air Tire

Heavy-Duty Junior Aluminum 2-In-1 Convertible Hand Truck
HTA-7A

Item #	Description
HTA-7A	- 57 high. - Capacity 500 lbs hand truck 1000 lbs. platform - Type Convertible Hand Truck - Material Aluminum - Tire & Wheel Specs Pneumatic Air Tire

Heavy-Duty ALUMINUM HAND TRUCK W/ CURVED FRAME
HTA-14U

Item #	Description
HTA-14U	- 53.5" high. - Capacity- 800 lbs - Type- None Extention/Curved frame - Material- Aluminum - Tire & Wheel Specs- Aluminum Flat Free

Heavy-Duty ALUMINUM HAND TRUCK W/ Extruded Nose
HTA-14 (w/PT-007)
HTA-14 (w/PT-007) TA

Item #	Description
HTA-14	- Capacity 800 lbs. - Type Extruded Nose - Material- Aluminum - Tire & Wheel Specs- Aluminum Flat Free

HTA-14 (w/PT-007)	HTA-14 (w/PT-007) TA
- w/ 18 -Inch Exention Handle	- w/ 24 -Inch Exention Handle

Heavy-Duty ALUMINUM HAND TRUCK W/ Die-Cast Nose
HTA-14 (w/PT-006)

Item #	Description
HTA-14 (w/PT-006)	- 53.5" high. - Capacity: 800 lbs. - Type: Die-Cast Nose - Material: Aluminum - Tire & Wheel Specs: Aluminum Flat-Free

Heavy-Duty Furniture Moving Dollies

Item #	Description
NK-Dolly	-Hardwood frame -Carpeted surfaces -TPR Non-Marking swivel casters

CARPET DOLLY FRAME

18" x 30 "	18" x 30 "	18" x 30 "	18" x 30 "
1200 lbs Cap.	1200 lbs Cap.	1200 lbs Cap.	1200 lbs Cap.
3",4" or 5" TPR Casters	3",4" or 5" TPR Casters	3",4" or 5" TPR Casters	3",4" or 5" TPR Casters
Grey Carpeted Deck Hardwood	Red Carpeted Deck Hardwood	Blue Carpeted Deck Hardwood	Rubber Ends Hardwood for Extra Grip

Economic Furniture Moving Dollies

-Hardwood Frame 18" x 30"
-Carpeted surfaces
-Hard-rubber swivel casters

Heavy-Duty Dolly Panel Converter Bars,

-5 x 16x38"
-Capacity- 400 lbs.
-Steel converter arms transforms a dolly into a panel cart
-Ideal lightweight moving solution for industrial and commercial use
-Press fit installation for quick and easy assembly

Rubber Cap Replacement for NK Rubber Cap Dolly

NK PANEL MOVER, **VINYL COATED** REMOVABLE UPRIGHTS PLATFORM

- Robotic welded 16 gauge tubular
- Overall dimensions- 27 1/2" x 38 1/2
- load area- 27 1/2" x 36"
- Three removable uprights made of 1" x 16 gauge welded steel tubing
- Standard 25" High
11 3/4" between upright sockets
Finish- flat arm and uprights coated with no ovear, Skid resistant vinyl
- Break Strenght 7000 lb
- Meet or Exceeds Applicable Federal Specification RR W 410
- Load Capacity- 2400 Lbs

Heavy-Duty Aluminum Foldable Hand Truck
FHT-003S 6pcs case

-Lightweight aluminum trucks weigh as little as 6 lbs
-15 x 11" Nose Plate. 39" high
- Load Capacity: 275 lbs.

Heavy-Duty Aluminum Foldable Hand Truck
FHT-003BT 5pcs case

-19 x 13-3/4" Nose Plate. 42" high
- Load Capacity: 500 lbs.

RK Folding Shopping Cart
NK-FSCT-1

Heavy-Duty Folding Platform Truck

Item	Platform Size	Capacity
NKFT150	24x18x29 Inches	330 LBS
NKFT300	36x24x35.5 Inches	660 LBS

Heavy-Duty DRYWALL CART
NKDCY with Non-Marking TPR Casters

-Capacity: 3000 lbs.
-Includes four 8 in. 3 TPR Swivel Caster, 1 TPR Swivel Caster with a brake mechanism to keep the cart from rolling away

Item	Color	Platform Size	Wheel Size	Wheel type	Capacity
NKDCY	YELLOW	44" x 17"	8"	3x Swivel / 1x Swivel w/ Brake	3000 LBS

RK Safety RK-PMB Piano Moving Skid Board

Contains: 1 Piano Moving Skid Board
Color: Blue
Material: Hardwood

Dim: 74"L x 13"W x 6"H
NK-PBOARD-6FT

Dim: 60"L x 13"W x 6"H
NK-PBOARD-5FT

Canvas Basket Truck

- 14 bushel capacity
- Move wet or dry bulk loads such as packages, laundry and textiles.
- Recommended for health clubs, hotels and locker rooms.
- Document pocket
- 3" Non-Marking polyurethane (TPR) swivel casters for easy maneuvering.
- 360 degree steering!

14 Bushel Capacity
NKCB14BU

16 Bushel Capacity
NKCB16BU

Heavy-Duty PALLET TRUCKS NKPJ2936

Item	Color	Fork Size	Capacity
Narrow Fork	Grey	21.6x47.2"	5500 LBS
NKPJ2936G	Grey	27x47.2"	5500 LBS

Standard Forks 27"

Narrow Forks 21"

Heavy-Duty Grey Pallet TRUCK W/ Custing Pump

5500 LBS CAPACITY

Available Fork Size:
-21.6" (Narrow Fork)
-27" (Standard Fork)

Heavy-Duty Non Marking Soft Gray Rubber TPR Casters

Color: Gray
Style: Caster
Feature: Non Marking
Type: Swivel Caster
Bearing: Ball
Material: Thermoplastic Rubber Gray Soft Rubber
Model Type: Swivel
Tire & Wheel Specs: Soft Rubber

Item	Caster Size	Plate Size	Brake	Capacity	QTY
CTPR3SS	3"x1.1/4"	2.1/2"x3.5/8"	N/A	200LBS	40/case
CTPR3SL	3"x1.1/4"	3.1/8"x4.1/8"	N/A	200LBS	40/case
CTPR3R	3"x1"	3.3/4"x2.1/2"	N/A	200LBS	40/case
CTPR4SS	4"x1.1/4"	2.1/2"x3.5/8"	N/A	250LBS	30/case
CTPR4SL	4"x1.1/4"	3.1/8"x4.1/8"	N/A	250LBS	24/case
CTPR4R	4"x1"	3.3/4"x2.1/2"	N/A	250LBS	30/case
CTPR4SSBR	4"x1.1/4"	2.1/2"x3.5/8"	Total Lock	250LBS	32/case
CTPR5SS	5"x1.1/4"	2.1/2"x3.5/8"	N/A	250LBS	20/case
CTPR5SSBR	5"x1.1/4"	2.1/2"x3.5/8"	Total Lock	250LBS	12/case

Heavy-Duty Non Marking Donut TPR Casters -8"x2" 6pcs case

Color: Gray
Style: Caster
Feature: Non Marking
Bearing: Ball
Material: Thermoplastic Rubber Gray Soft Rubber
Model Type: Swivel/ Rigid
Tire & Wheel Specs: Soft Rubber

A total-lock brake simultaneously prevents rolling and restricts swivel movement when the foot-operated lever is depressed.

Item	Caster Size	Plate Size	Brake	Capacity
CTPR8R	8"x2"	4" x 4-1/2"	N/A	500LBS
CTPR8S	8"x2"	4" x 4-1/2"	N/A	500LBS
CTPR8SBR	8"x2"	4" x 4-1/2"	Total Lock	500LBS

Heavy-Duty Moldon Rubber on Cast Iron Wheels

Bolt Hole Dimensions: 2 - 5/8" x 3 - 5/8" to 3" x 3"
Top Plate Size: 4" x 4 1/2"
Capacity: 500 LBS per Wheel

Item	Caster Size	Plate Size	Brake	Capacity	QTY
CMDR6R	6" x 2"	4" x 4-1/2"	N/A	500 LBS	
CMDR6S	6" x 2"	4" x 4-1/2"	N/A	500 LBS	
CMDR6BR	6" x 2"	4" x 4-1/2"	Total Lock	500 LBS	
CMDR8R	8" x 2"	4" x 4-1/2"	N/A	500 LBS	
CMDR8S	8" x 2"	4" x 4-1/2"	N/A	500 LBS	
CMDR8BR	8" x 2"	4" x 4-1/2"	Total Lock	500 LBS	

CHR2SSRE

CHR2SSBRRE

CHR3SSRE

CHR3SSBRRE

CHR4SSRE

CHR4SSBRRE

Hard Rubber Swivel Plate Casters

Item	Caster Size	Plate Size	Brake	Capacity	QTY/ Case
CHR2SSRE	2" x .875"	2.56" x 1.88"		100 LBS	60
CHR2SSBRRE	2" x .875"	2.56" x 1.88"	✓	100 LBS	60
CHR3SSRE	3" x 1.25"	2-1/2" x 3-5/8"		175 LBS	40
CHR3SSBRRE	3" x 1.25"	2-1/2" x 3-5/8"	✓	175 LBS	60
CHR4SSRE	4" x 1.25"	2-1/2" x 3-5/8"		300 LBS	40
CHR4SSBRRE	4" x 1.25"	2-1/2" x 3-5/8"	✓	300 LBS	60

Heavy-Duty 2" Low Profile Plate Casters with Dual Wheel Brake

60 pcs case

Heavy-Duty Scaffold Casters with Black Rubber Mold-on Steel Wheel & Brake -8"x2"

4 pcs case

Color: Black
Type: Scaffold Stem With Brake
Bearing: N/A
Material: Black Rubber Mold On Steel
Capacity: 500# Per Caster
Wheel Size: 8" x2"
Mounting Size: 1-3/8" Diameter x 4" Tall

-One locking hole at 2 1/2 inches

CMDRS8BL

CPNMT10R
Rigid

CPNMT10S
Swivel

CFF10S
Swivel (Air-Filled)

Heavy-Duty 10 Inch Plate Caster -10"x3-1/4"

8 pcs case

- Makes moving items easy
- Load rating: 310 lbs
- 10" Plate Caster can be used on wagons, cabinets, carts and more
- Made of high quality materials

CTPR5RSTBR
24 pcs case

CTPR5RST
28 pcs case

5" Round Stem TPR Caster -5"x1-1/4"

The wheel on this swivel caster is HARD rubber for durability and smooth movement on the floor of any workshop, factory, restaurant, school or hospital. These casters have a 120 lb. capacity and 360 degree rotation to maneuver weightier items on your cart. Features include double ball bearings and a zinc plated steel frame for durability. This handy swivel caster rolls smooth and won't mar floors during use.

5" Shopping Cart Caster -5"x1-1/4"

24 pcs case

- Capacity up to 250 lbs. per caster
- 5" x 1 1/4" Polyurethane Ball Bearing wheel
- Purplish Blue Color Wheel
- Sealed Upper Swivel Bearing

CPU5SST

5" Hard Rubber Caster -Screw Stem Type -5"x1-1/4"

28 pcs case

- Swivel Stem Caster with 5" Hard Rubber Wheel 3/4" tall Threaded Stem Heavy Duty
- Wheel Width: 1-1/4"
- Wheel Dia. : 5"
- Overall Height: 7"
- Frame Material: Steel, Wheel Material: Hard Rubber

CHR5SST

WPNMT-10

WPNMT-10 (YJ)

WSEPN-8

WSEPN-10

WAW8

WTPR8
WTPR8LG

Item	Wheel Dia.	Wheel Width	Bearing	Capacity	Type	Hub Type
WEVA10	10"	3.5"	5/8	300LBS	FLAT FREE	2-1/4 Offset
WPNMT-10 (YJ)	10"	3.5"	5/8	300LBS	PNEUMATIC	2-1/4 Offset
WSEPN-10	10"	3.5"	5/8	250LBS	SEMI-PNEUMATIC	2-1/4 Offset
WSEPN-8	8"	3.5"	5/8	80LBS	SEMI-PNEUMATIC	2-1/4 Offset
WAW8	8"	1-5/8"	5/8	200LBS	FLAT FREE	Centered
WTPR8	8"	2"	5/8	200LBS	FLAT FREE	Centered
WTPR8LG	8"	2"	5/8	200LBS	FLAT FREE	Centered

Pneumatic wheels are great for smooth rides over uneven terrain and door thresholds. If your work takes you over loose gravel, dirt or grass the pneumatic wheel is the right choice for your hand truck.

Usages:
When using your hand truck over rough, uneven or smooth areas.

Flat Free wheels are ideal for mostly smooth areas. Solid wheels offer a more rigid ride for your hand truck. Solid hand truck wheels are low to no maintenance and will never go flat.

Usages:
When using your hand truck over smooth even surfaces.

MATERIAL HANDLING HAND TRUCKS REPLACEMENT WHEELS

WFF10

WFFOR10

WFFGR10

WFFBL10

WFF8

Flat Free wheels are ideal for mostly smooth areas. Solid wheels offer a more rigid ride for your hand truck. Solid hand truck wheels are low to no maintenance and will never go flat.

Usages:
When using your hand truck over smooth even surfaces.

Item	Color	Wheel Dia.	Wheel Width	Bearing	Capacity	Type	Hub Type
WFF10	Black	10"	3.5"	5/8	250 LBS	FLAT FREE	2-1/4 Offset
WFFOR10	Orange	10"	3.5"	5/8	250 LBS	FLAT FREE	2-1/4 Offset
WFFGR10	Gray	10"	3.5"	5/8	250 LBS	FLAT FREE	2-1/4 Offset
WFFBL10	Blue	10"	3.5"	5/8	250 LBS	FLAT FREE	2-1/4 Offset
WFF8	Black	8"	3.5"	5/8	250 LBS	FLAT FREE	2-1/4 Offset

10pcs case

NKWB6601

NKWB7808

NKWB66002W

Heavy-Duty Contractor Wheelbarrow

- Heavy-Duty steel tray braces provide added strength and support when pouring heavy loads.

- Glide-ring design on steel trays won't catch shovels or hoes.

Item	Color	Wheel size	Tire Type	Capacity	Assembled dimensions
NKWB6601	Orange	15" X 4"	PNEUMATIC TIRE	6 CUBIC FEET STEEL	25 in. W x 58.75 in. D x 24 in. H
NKWB7808	Blue	15" X 4"	PU FOAM TIRE- Flat Free	7 CUBIC FEET STEEL	25 in. W x 58.75 in. D x 27 in. H

Heavy-Duty Wheelbarrow Replacement Handles 16" x 4"

- Seal Coated for long life
- Capacity- 400 lbs
- Size- 2 x 1.5 x 60"

NKWBH

WFF16BK

WFF16OR

WPNMT16

Heavy-Duty Wheelbarrow Wheels, 16" x 4" (5 pcs case)

Item	Tire Dia.	Bearing	Capacity	Type	Hub Type
WFF16BK	16"	5/8	500 LBS	FLAT FREE	6" Centerd
WFF16OR	16"	5/8	500 LBS	FLAT FREE	6" Centerd
WPNMT16	16"	5/8	400 LBS	PNEUMATIC	6" Centerd

- Perfect for Contractor Wheelbarrows. Most Common for 6 Cubic Foot Wheelbarrow.
- 500 lb load capacity (Flat Free) / 400 lb load capacity (Pneumatic)

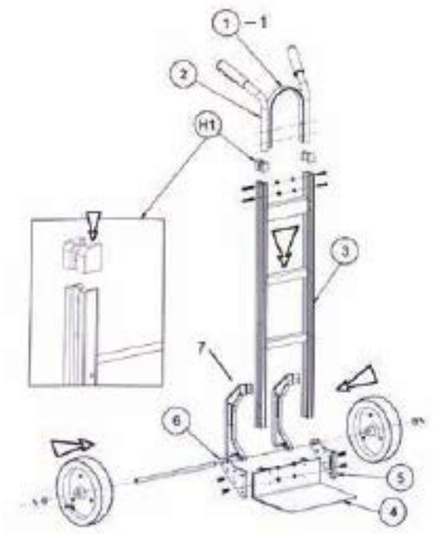

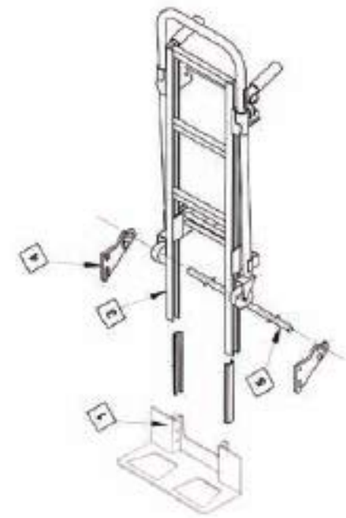

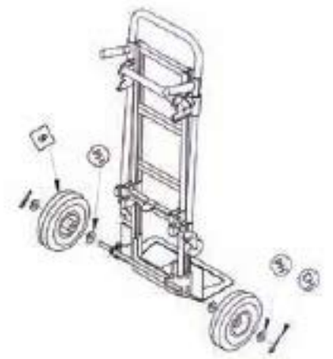

Heavy-Duty NK Compatible Hand Truck

#	Picture	Item	Description	#	Picture	Item	Description
1		NKDC-NOSE18	DIE CAST NOSE PLATE 18 x 18"	4		NKENOSE18	EXTRUDED NOSE 18 x 9"
6		NK008-L NK008-R	AXLE BRACKET	5		NK009	AXLE
H4		WASHERS	WASHERS	54		SPRING PINS FOR AXLE	SPRING PINS FOR AXLE, 4mm
H3		COTTER PINS	COTTER PINS 1/8 x 1 Inch	–		5/8 BEARINGS	5/8 BEARINGS
2		NK-001	DUAL HANDLES	14		EXTENSION HANDLE	EXT. HANDLE AVAILABLE SIZES: 45 cm 60 cm
–		EXTENSION TOE PLATE	EXTENSION TOE PLATE w/ Hardware	–		NK-013	Inside Reinforcement
7		NK-010	Stair Climbers w/ Hardware				

BETTER GRIP

BGCRPU Level 5 Cut Resistant Gloves Shell Touch Screen Compatible for Smart Phones

3 pairs / pack | 144 pairs / case

Availablesizes : S | M | L | XL

BGCRPU-WG

BGCRPU-OR

BGCRPU-BK

BETTER GRIP

BGFLEXMF Micron Foam Nitrile Coated Nylon Work Glove for Smart Phone

3 pairs / pack | 144 pairs / case

-Better Grip Flex Premium Nitrile Micro Foam Coating Gloves
-Provide Excellent Grip and Abrastion resistance, are Compatible with Light Oils
-Micro Foam Coating Gloves are Ultra Cool, Very Comfortable and Breathable
-Form Fit : Make You Feel Reduces Hand Fatigue While Providing Enhanced Comfort
-Nylon Spandex: Strong Against Ultraviolet Rays and Heat and Stretchy
-3 Fingers Working with Smart Phone: Texting, Calling

Availablesizes : S | M | L | XL

BGFLEXMF-LM

BGFLEXMF-BK

BGFLEXMF-GY

BGFLEXMF-OR

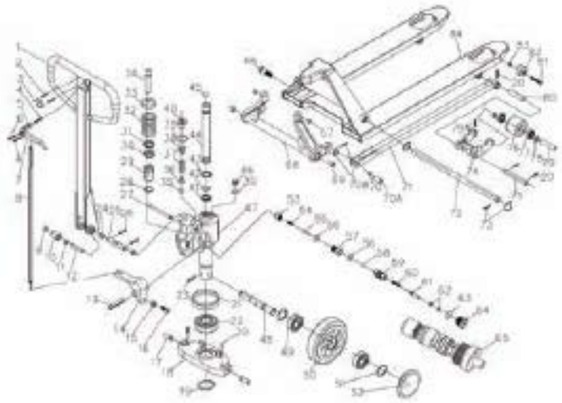

Heavy-Duty NK Compatible Pallet Truck Parts

# ITEM	Picture	Description	Picture	Description
#76 Replacement Load Wheels		**Nylon Single Load Wheel** 3" Diameter x 2-3/4" Wide 20 mm ID WPJLDNY29275BK		**PU Single Load Wheel (Metal)** 3" Diameter x 2-3/4" Wide 20 mm ID For the settings where cold storage or rust are an issue WPJLDPU29275BK
		Nylon Double Load Wheel 3" Diameter x 3-5/8" Wide 20 mm ID WPJLDNY2936BK		**PU Double Load Wheel (Metal)** 3" Diameter x 3-5/8" Wide 20 mm ID For the settings where cold storage or rust are an issue WPJLSPU2936BK
#50 Replacement Steering Wheels		**Nylon Steer Wheel** 7" Diameter x 2" Wide 20 mm ID WPJSTNY7BK		**PU Steer Wheel (Metal)** 7" Diameter x 2" Wide 20 mm ID For the settings where cold storage or rust are an issue WPJSTPU7BK
#75 Load wheel Axle		**Single Load Wheel Alex** 3.74 x 0.78" Pallet Jack Load Support Wheel 20mm ID Bearing Axle PJAXLE37478		**Double Load Wheel Axle** 4.8 x 0.78" Pallet Jack Load Support Wheel 20mm ID Bearing Axle PJAXLE4878
#20 Roll Pins		**Roll Pins for Load Wheel Alex** Roll Pins for Load Wheel Axel PJPIN		

All Kits come with Carriny Storage Bag

SPIDERGARD *3 Point Adjustable Harness with 6" Lanyard - 2 Snap Hooks*
Combo Set (6pcs case)

-6 ft(1.8m) Shock absorbing lanyard with 3/4 (19mm) in snap hook both ends
-Inspection Tag / Serial Number
-Accommodates Tool belt up to 4 inch (102mm) wide

Applicable Standards : ANSI Z359.11-2014

SPKIT01

All Kits come with Carriny Storage Bag

SPIDERGARD *5 Point Adjustable Harness with 6" Lanyard - Rebar Hooks* (6pcs case)
Combo Set

-6 ft(1.8m) Shock absorbing lanyard with 3/4 (19mm) in snap hook both ends
-Inspection Tag / Serial Number
-Accommodates Tool belt up to 4 inch (102mm) wide

Applicable Standards : ANSI Z359.11-2014

SPKIT02-OR

SPIDERGARD SPH001 (10pcs case)
5 Points Single D-Ring Adjustable Harness

SPIDERGARD SPH002 (10pcs case)
5 Points 3 D-Ring Adjustable Harness

-Light-weight and Durable
-Inspection Tag / Serial Number
-Fits a wide range of body types and sizes

Applicable Standards : ANSI Z359.11-2014

SPH001

SPH002

FALL PROTECTION

SPIDERGARD
ANSI Z359.11-2014

Spidergard SPH0015PT
5-Point Adjustment
Full Body Harness, Orange

SPH0015PT

Spidergard SPH-C01
Construction Harness, 3 D-rings with Tongue Buckles Red and Black (5pcs case)

SPH-C01

-Meet ANSI Z359.13-2013
-6 Points adjustability, easy adjustment
-Industrial full body harness with 3 D-ring : 1 backside and 2 sides
-Comes standard with full shoulder, back, waist, and leg comfort padding
-Tongue buckle leg straps

Spidergard SP-RFKIT
Construdtion Harness with Leg Tongue Buckle Straps and 4 Pieces Roof Kit Combo (1pcs case)

-Contains : a 5 Point tongue buckle harness, 50ft rope (snap hook on top), a rope grab with shock pack, a roof anchor and a bucket
-Harness : 1 Dorsal D-ring, Buckle on grommeted straps and Meet ANSI Z359.1
-Rope Grab : rope grab with shock pack, Meet OSHA/ANSI standards
-Roof Anchor : Meet ANSI Z 359.1-2007, Galvanized steel with stamped D-ring, and Minimum breaking strength is 5000 lbs / 23kN
-50 ft Rope : Snap hook on top, taped bottom, Polysteel twisted rope and Meet OSHA/ANSI standard

SP-RFKIT

6-Foot Doulbe Leg Internal Shock Lanyard with Rebar Hook

SPIDERGARD

-Made with a heavy duty outer polyester webbing and a polyester core special sewn in to reduce impact forces
-Light-weight
-Rebar hooks
-6ft in length
-Double leg lanyard

SPLD201

6-Foot Internal Shock Lanyard with Rebar Hook

-Made with a heavy duty outer polyester webbing and a polyester special sewn in to reduce impact forces
-Light-weight
-Rebar hooks
-6ft in length
-Single lanyard

SPLD001

SPLD002

6-Foot Elasticated Internal Shock Absorbing Lanyard with Rebar Hook, Red

-Made with a heavy duty outer polyester webbing and a polyester special sewn in to reduce impact forces
-Light-weight
-Rebar hooks
-6ft in length
-Single / Double Leg
-Meet ANSI Z359.13-2013

SPL-S201 5pcs case

SPL-S101 10pcs case

SPL-S102 10pcs case

D-Ring End Concrete Anchor Strap with Protective Sheathing, Red Black 25pcs case

SPIDERGARD

-Maximum User Capacity 400 lbs
-Maximum Breaking Strength 5,000 lbs
-ANSI Z3 59.1-0 7[09].OSHA 1926.502
-Sheathed In Heavy Duty Webbing
-Disposable and intended for one time use only

Item	Length
SPA201	4 ft
SPA202	6 ft

SPA201

SPA202

3 Foot Cross Arm Straps with Large, Small D-Rings, Yellow

25pcs case

-Meet ANSI Z359.13-2013
-Heavy duty stitching and durable with dual enforced webbing
-Standard size D-ring for pass-thru and Large size D-ring are length adjustment
-Length : 3 foot

SPA101

Lanyard Extension with Snaphook

25pcs case

-Meet ANSI Z359.13-2013
-18 inch length
-Ideal for workers who cannot comfortably reach the dorsal
-D-ring on their harness
-Yellow Color
-Material: Polyester and galvanized steel

SPL-EL15

Tool Lanyard with Single Carabiner

SPIDERGARD

3 Pairs / Pack | 8 Pack /case

Length : 35" - 42" (89 - 110cm)
-Tethers tools to help worker prevent injury, damage and lost productivity from dropped tools
-Envery-absorbing cord with tubular-nylon webbing
-Single-action aluminum carabiner
-Refelective accent for higher visibility

SPTOOL02

SPTOOL01

Double Legs Elastic Tool Lanyard with Single Carabiner

3 Pairs / Pack | 34 Packs /case

Length : 35" - 42" (89 - 110cm)
-Tethers tools to help worker prevent injury, damage and lost productivity from dropped tools
-Envery-absorbing cord with tubular-nylon webbing
-Single-action aluminum carabiner
-Refelective accent for higher visibility

SPTOOL21

Rebar Chain Assembly for Positioning with Two Snap Hooks

5 pcs case

Length : 22"
-Ideal for work positioning
-Extremely durable twist link chain construction
-User friendly self locking snap hooks at leg ends
-High Strength Model

SPL-RC01

SPIDERGARD

Wire Rope Self-Retracting Lifeline with Swivel Hook and Carbiner

Length : 25 Foot / 50 Foot
-Wire rope leading edge retractable fall arrester with swivel hook
-7 x 19 Galvanized steel cable (3/16" dia)
-Max arresting force 1800 lbs
-Meet ANSI Z359.14

SPL-RR30 3pcs case

SPL-RR50 2pcs case

8 Foot Retractable Lifeline with 2 inch Webbing, Lime

Length : 8 Foot
-Meet ANSI Z359.13-2013
-8 foot length
-Steel frame with PVC cover and polyester webbing
-Inertial locking system

SPL-RW8 10 pcs case

RN90K

10-foot self-retracting lanyard with cover, autolocking carabiner and 3/4 in. swivel locking snap hook

TRACTEL TRALIFT. CHAIN LIFT

- Models from 500 lbs. (1/4t) to 40,000 lbs. (20t)
- Heavy duty design
- Adjustable lift
- Swivel hook with hook latch

Item	Lift	Capacity	Fall	Chain Size	Weight
19709	10'	1/2 Ton	1	5 x 15 mm	20 lbs
19711	20'	1/2 Ton	1	5 x 15 mm	24 lbs
19719	10'	1 Ton	1	6 x 18 mm	27 lbs
19721	20'	1 Ton	1	6 x 18 mm	32 lbs
19729	10'	1.5 Ton	1	8 x 24 mm	42 lbs
19731	20'	1.5 Ton	1	8 x 24 mm	51 lbs

RCAP-725

Rebar Cap -OSHA #3 -#7 25/ CTN

25 pcs case

- Cover Contains a Curved Steel Plate
- Fits Rebar #3-#7
- Cal OSHA Approval #C1703Ag
- Meets Federal OSHA Spec. #1926.701(b)

TRACTEL CORSO BEAM TROLLEY

- Fits I-beam from 2-5/16 to 8-11/16 in. (59 to 220 mm)
- Screw-down adjustment
- Locking nut

Item	Capacity	To suit beam MM.
23309	1/2 Ton	59 x 220 mm
23319	1 Ton	59 x 220 mm
23329	2 Ton	66 x 220 mm

TRACTEL CORSO BEAM CLAMP

Fits I-beam from 3 to 9 1/4 in. (76 to 235 mm)
Screw-down adjustment

Item	Capacity
CC07009	1 Ton
CC07019	2 Ton

FALL PROTECTION

RK Poly-Combo 3-Strand Safety Rope, 5/8 in x 600 ft

RK-SR58600

RK Poly-Combo 3-Strand Safety Rope, 3/4 in x 600 ft

RK-SR34600

ROOFING AND GIN WHEEL PULLEY

Used for hoisting operations up to 500 lb. Drop-forged flat swivel hook with latch for added safety. Roller bushing, painted finish.

Block size: 12". Rope diameter: 1". Working load limit: 1000 lb

RK-GW12

5/8" -3 Strands Polydac, Superline Lifeline with Self Lock Hook

Item	Material	Diameter	Length	Construction
GS25NK	Nylon	5/8"	25'	3-Strands
GS50NK	Nylon	5/8"	50'	3-Strands
GS75NK	Nylon	5/8"	75'	3-Strands
GS100NK	Nylon	5/8"	100'	3-Strands

FRH-S

ANSI Certified High Strength Rebar Hook FRH-S

- ANSI Certified Z359.1-2007 / Z359.12-2009/ EN362
- Major - 23 kN (5000 LB) / Gate - 3600 LB
- Double Action / Self Locking Gate
- Material: Steel
- 2-3/8 in clear gate opening

CARABINER

SPSC001

SD1813-QC

SPAC002

SPSC002

Item	Material	Description	Tensile Strength	Gate Strength	Dim
SPSC001	Metal	Twist Lock, Auto Locking, 1-Inch Gate Opening	50 kn	16 kn	3 x 4.8 x 0.5 in.
SPAC002	Aluminum	Twist Lock, Auto Lock. Aluminum Carabiner	25 kn	16 kn	4.87 x 3.0 in.
SD1813-QC	Aluminum	Twist Lock Aluminum Carabiner	25 kn	16 kn	4-1/2 x 2.75 in.
SPSC002	Steel	Twist Locking, Alloy, Steel Carabiner	25 kn	16 kn	4.17 x 2.34 in.

SPR-RG08

5/8-Inch Rope Grab with 2-Inch Connecting Eye

Automatic Lock System when falls
capacity: 130-310 LBS
10PE 1/2" -5/8" (13mm -16mm)
meets the requirements of ZSA/N ANSI Z359.1

VF 505

Model # VF505 Rope Grab

Automatic energy absorbing rope grab follows
inworker up and down a 5/8" -3/4" diameter
vertical synthetic lifeline. New York State
Approval # 9502

SPSC003

ANSI Certified Spidergard Alloy Steel Carabiner SPSC003

ANSI Certified Z359.12-09/CSA Z259.12-09/EN362-2004
Gate Strength: 3600 LBS (16 kN) (Major Strength: 10 kN)
Twist Locking Gate 1 - Inch Gate Opening
Plugged Forged Alloy steel construction
Comes with a Captive Pin is guard against inadvertent
or forced carabiner rollout in use

SPFSH-001S

ANSI Certified Spidergard Forged Steel Snap Hook SPFSH-001S

ANSI Certified Z359.12-09/CSA Z259.12-10
EN 362-2004
Maximum Breaking Strength: 23 kN
Forged Steel Snap Hook with 3/4" Gate Opening
Double Action / Self Locking Gate
Zinc plated for corrosion protection

DROP-FORGED

MALLEABLE & DROP-FORGED WIRE ROPE CLIPS

SIZE	MALLEABLE, ZINC PLATED					DROP-FORGED, HOT GALVANIZED				
	STOCK NUMBER	WEIGHT/ 100 PCS. (LBS.)	MIN. CLIPS REQ'D	TORQUE IN LBS. FT.*	TURN BACK LENGTH	STOCK NUMBER	WEIGHT/ 100 PCS. (LBS.)	MIN. CLIPS REQ'D	TORQUE IN LBS. FT.*	TURN BACK LENGTH
1/4"	RKMERC1/4 250	14	3	15	7"	DFWRC250	18	2	15	4 3/4"

SHOULDER PATTERN MACHINERY EYE BOLT

MACHINERY EYE BOLTS - SHOULDER PATTERN OR PLAIN PATTERN

Self Colored

SIZE	STOCK NUMBER		WORKING LOAD LIMIT (LBS.)	WEIGHT/PIECE (LBS.)
	SHOULDER	PLAIN PATTERN		
RKMEB38114	MEB375X1250S	MEB375X1250P	1,550	0.15

EYE & HOOK

TURNBUCKLES

Hot Galvanized - Drop Forged

SIZE	OVERALL CLOSED LENGTH	APPROXIMATE WEIGHT/PIECE (LBS.)			WORKING LOAD LIMIT (LBS.)	
		EYES &/OR HOOKS	EYE & JAW	JAW & JAW	HOOK & HOOK EYE & HOOK	EYE & EYE EYE & JAW JAW & JAW
RKTBEH 5/16X4 1/2	9.5"	.53	.53	.58	700	800

RK-SAFETY Galvanized Aircraft Cable

7x19 Construction

500 Feet

RKGAC1/47X19500

7x19 Construction

500 Feet

RKGAC3/81X19250

7x19 Construction

250 Feet

RKGAC1/47X19250

BETTER GRIP® (4 pairs / pack, 144 pairs / case)

Summer Sandy Nitrile Coated Knit Work Gloves

15 gauge hi-viz nylon shell | Sandy Nitrile Coated | Elastic slip-on cuff | No Lining

Item	Color	Sizes	QTY		
BGSB1	Black	S, M, LG, XL	4 PAIRS/ PACK	36 PACK/CASE	144 PAIRS
BGSL1	Lime	S, M, LG, XL	4 PAIRS/ PACK	36 PACK/CASE	144 PAIRS
BGSO1	Orange	S, M, LG, XL	4 PAIRS/ PACK	36 PACK/CASE	144 PAIRS
BGSRD1	Red	S, M, LG, XL	4 PAIRS/ PACK	36 PACK/CASE	144 PAIRS
BGSMT1	Military	S, M, LG, XL	4 PAIRS/ PACK	36 PACK/CASE	144 PAIRS
BGSBL1	BLUE	S, M, LG, XL	4 PAIRS/ PACK	36 PACK/CASE	144 PAIRS

BGSB1 BGSL1 BGSO1 BGSRD1 BGSMT1 BGSBL1

BETTER GRIP® (3 pairs / pack, 72 pairs / case)

Winter Sandy Nitrile Coated Knit Latex Dip Nylon Work Gloves - DOUBLE LINING

15 gauge hi-viz nylon shell | Sandy Nitrile Coated | Elastic slip-on cuff |

Item	Color	Available Sizes	QTY		
BGWANS-LM	Lime	M, LG, XL	3 PAIRS/ PACK	24 PACK/ CASE	72 PAIRS
BGWANS-PP	Purple	M, LG, XL	3 PAIRS/ PACK	24 PACK/ CASE	72 PAIRS
BGWANS-BK	Black	M, LG, XL	3 PAIRS/ PACK	24 PACK/ CASE	72 PAIRS
BGWANS-MT	Military	M, LG, XL	3 PAIRS/ PACK	24 PACK/ CASE	72 PAIRS
BGWANS-OR	Orange	M, LG, XL	3 PAIRS/ PACK	24 PACK/ CASE	72 PAIRS

BGWANS-RD

Insulated

BGWANS-BL

BGWANS-LM BGWANS-PP BGWANS-BK BGWANS-MT BGWANS-OR

HEAVY - DUTY CONTRACTOR BAGS

- Maximum puncture and tear resistance.
- For site cleanup, demolition and remodeling.

18x16x46 (#20)	3MIL 100PCS GARBAGE BAG-#22
18X16X46 (20 pcs)	3MIL 20PCS GARBAGE BAG
18x16x46 full-(4mil)	4MIL 100PCS GARBAGE BAG
18x16x46 Half 50PCS	3MIL 50PCS GARBAGE BAG
22x16x58 full 58G	58 GALLON 100PCS GARBAGE BAG
RECB46	BLUE RECYCLE BAG
RECC46	CLEAR RECYCLE BAG

HEAVY - DUTY STRETCH WRAP

- Premium quality stretch wrap film with outstanding tear resistance

18" Wide - 80 Gauge

RK-PPSW8C

Clear Stretch Film

4 rolls / case

RK-PPSW18B

Securi Wrap Opaque Stretch Film

4 rolls / case

Glow in Dark Anti Slip Tape 2" x 14'

72 rolls / case

- Improves Traction and Prevent Risk of Slippage for Indoor Outdoor Stair Ramp

RK-AST214GD

Clear Packing Tape

36 rolls / case

- Industrial Carton Sealing
- 2" x 110 yd x 45 micron

RK-PPBT2110C

CONTRACTOR BAGS / STRETCH WRAP

Black Anti-Skid Indoor Outdoor Tape

Safe Non-Slip Resistance Increases Traction
Adhesive | Flooring Fire Escapes Boats Steps
Wheelchair Ramps Docks Service Area

Item	Size	Qty
RK-AST160B	1" X 60' 80 Grit	48 Rolls / Box
RK-AST260B	2" X 60' 80 Grit	24 Rolls / Box
RK-AST360B	3" X 60' 80 Grit	16 Rolls / Box
RK-AST460B	4" X 60' 80 Grit	12 Rolls / Box

Black and Yellow Anti-Skid Indoor Outdoor Tape

High Traction Safe Abrasive Grit Grip
Indoor & Outdoor Non-Skid Adhesive
Boats Docks Fire Escapes Wheelchair Ramps Stairs Steps

Item	Size	Qty
RK-AST160YB	1" X 60' 80 Grit	48 Rolls / Box
RK-AST260YB	2" X 60' 80 Grit	24 Rolls / Box
RK-AST360YB	3" X 60' 80 Grit	16 Rolls / Box
RK-AST460YB	4" X 60' 80 Grit	12 Rolls / Box

Clear Anti-Skid Indoor Outdoor Tape

Transparent Safe Anti Slip Adhesive
For Showers, Bathrooms, Tubs, Steps, Ramps & Stairs

Item	Size	Qty
RK-AST160C	1" X 60' 80 Grit	48 Rolls / Box
RK-AST260C	2" X 60' 80 Grit	24 Rolls / Box
RK-AST360C	3" X 60' 80 Grit	16 Rolls / Box
RK-AST460C	4" X 60' 80 Grit	12 Rolls / Box

Clear Anti-Slip Safety Track Tape (10 Pack)

High Weatherability + Weather Resistant: Great for Snow
(Initially allow 12 hours in dry setting)
Anti Slip Tape For Indoor & Outdoor Use:
Stairs, Steps, Parking Lots, Kitchens, Sidewalks, Slopes,etc

4" x 24" 80 Grit

10 pcs / Pack
15 Pack / Box

RK-AST424C

RK White Woven Polypropylene Sandbags with Ties

Maximum UVI protection - lasts 1,600 hours in the sun.

- **HEAVY DUTY BUILD: Hemmed top for easy fill , DOUBLE-SEWN bottom for extra strength**
- **HEAVY DUTY MATERIALS: 33 grams each, 850 denier count, 10 x 10 tubular weave**

Dim.	Qty
17" x 27"	500 pcs /bale
18" x 30"	500 pcs /bale

RK Safety RK-DUST-LDWB Dustpan and Lobby Broom Combo

Contains: Lobby Broom & Dustpan (Need to Assemble)
Dimension : Broom : 38 1/4" x 1 1/4" Dustpan : 40 1/2" x 4"
Dustpan Pivots for Easy Storage and Locks into Place for Secure Debris Collection
Perfect for Use at Home, Office, Restaurant, hotels, Lobbies, Malls, Inside, Outside, and More
Broom Clip on Dustpan for Convenient Storage

RK-DUST-LDWB

RK Safety 24 Inch Heavy-Duty Push

RK-SJB001-1

RK MOB BUCKET - 36QT - BLU

RK MOB BUCKET - 36QT - YEL

RK Side Press Wringer Mop Bucket

Available Colors: **Blue and Yelow**

36QT

- 36 qt. capacity
- Higher back for more comfortable wringing; lower front for easier placing of mop reducing back strain
- Large target area: large capacity side press/ squeeze wringer accommodates 12-32 oz. mops
- Smooth surface for easy cleaning
- Non-marking gray quiet casters (not assembled)

RK MOB BUCKET-
24QT-YEL

RK Side Press Wringer Mop Bucket

Available Color: **Yellow**

24 QT

- Compact mop bucket has a 24-qt. capacity basin with an attached side-press wringer to extract excess water from a mop and funnel the liquid back into the basin
- Polyethylene body is durable and corrosion resistant
- Four non-marking casters provide mobility

Set of 4

RK MOB BUCKET-
36QT-BLU

60 pcs case

Set of 4

RK MOB BUCKET-
36QT-YEL

40 pcs case

RK WRINGLER-
36QT-YEL

RK WRINGLER-
36QT-BLU

RK WRINGLER-
24QT-YEL

RK Cap Style Hard Hat

RK Cap Style Hard Hat with
4-Point Ratchet Suspension

12 case

Features:
-Shell Constructed From High Density Polyethylene Materials
-Low Profile Design
-Rain Trough On Sides And Back Of Helmet Channel Moisture Away.
-Universal Accessory Slots Fit Cap Mounted Ear Muffs And Chin Straps.
-Ratchet Suspension Is Easy To Adjust And Allows The Wearer To Modify The Fit While Wearing Hard Hats.

RED

BLACK

DARK GREEN

HI-VIS GREEN

YELLOW

HI-VIS ORANGE

LIGHT BLUE

DARK GREY

HI-VIS PINK

WHITE

ITEM	COLOR	QTY	ITEM	COLOR	QTY
HP14-BK	BLACK	12ea/case	HP14-HIP	HI-VIS PINK	12ea/case
HP14-BL	BLUE	12ea/case	HP14-LB	LIGHT BLUE	12ea/case
HP14-DGR	DARK GREEN	12ea/case	HP14-MBK	MATT BLACK	12ea/case
HP14-HIG	HI-VIS GREEN	12ea/case	HP14-RD	RED	12ea/case
HP14-HIO	HI-VIS ORANGE	12ea/case	HP14-WH	WHITE	12ea/case
HP14-YEL	YELLOW	12ea/case	HP14-DR	DARK GREY	12ea/case

RK Cap Style with Designed Hard Hat

12 case

HP34-SKULL

HP34-FLAG

HP34-LADIES

HP34-ORIENT

HP34-WOLVES

HP34-CAMO

HP34-BROWN

RK-Safety Clamp Hard Hat Lanyard (Clamp, Lime)

50 pcs case

ITEM	QTY
HP34-FLAG	12ea/Cs
HP34-LADIES	12ea/Cs
HP34-ORIENT	12ea/Cs
HP34-SKULL	12ea/Cs
HP34-WOLVES	12ea/Cs
HP34-CAMO	12ea/Cs

RK Brim Style Hard Hat

RK Brim Style Hard Hat with 4-Point Ratchet Suspension

12 case

Features:
- Shell Constructed From High Density Polyethylene Materials
- Low Profile Design
- Rain Trough On Sides And Back Of Helmet Channel Moisture Away.
- Universal Accessory Slots Fit Cap Mounted Ear Muffs And Chin Straps.
- Ratchet Suspension Is Easy To Adjust And Allows The Wearer To Modify The Fit While Wearing Hard Hats.

ITEM	COLOR	QTY	ITEM	COLOR	QTY
HP24-BK	BLACK	12ea/case	HP24-OR	ORANGE	12ea/case
HP24-BL	BLUE	12ea/case	HP24-RD	RED	12ea/case
HP24-HIG	HI-VIS GREEN	12ea/case	HP24-WH	WHITE	12ea/case
HP24-MBK	MATT BLACK	12ea/case	HP24-YEL	YELLOW	12ea/case

BLACK

BLUE

HI-VIS GREEN

RED

WHITE

YELLOW

HI-VIS ORANGE

RK Brim Style with Designed Hard Hat

HP44-SKULL

HP44-FLAG

HP44-LADIES

HP44-ORIENT

HP44-WOLVES

HP44-CAMO

HP44-BROWN

RK Brim Style Hard Hat with 4-Point Ratchet Suspension

Features:
- Shell Constructed From High Density Polyethylene Materials
- Low Profile Design
- Rain Trough On Sides And Back Of Helmet Channel Moisture Away.
- Universal Accessory Slots Fit Cap Mounted Ear Muffs And Chin Straps
- Ratchet Suspension Is Easy To Adjust And Allows The Wearer To Modify The Fit While Wearing Hard Hats

ITEM	QTY
HP44-FLAG	12ea/Cs
HP44-LADIES	12ea/Cs
HP44-ORIENT	12ea/Cs
HP44-SKULL	12ea/Cs
HP44-WOLVES	12ea/Cs
HP44-CAMO	12ea/Cs

Adhesive Vinyl Retro-Reflective Hard Hat/Helmet Sticker, 1" Length x 4" Width x 0.014" Thickness (Pack of 16)

Available colors : Lime / Orange / Blue / Yellow / Pink / Purple / Red / White

HARD HATS with Rachet Suspension

MSA

Black fire polyethylene Resin Hard Hat
MSA10124206

Fibre Metal Spirit of America Hard Hat
FIBE2RW00A006

Fibre Metal Spirit of America Hard Hat
FIBE1RW00A006

MSA V-Gard Cap Style Hard Hat - American Eagle
MSA10079479

MSA Tan Skullgard Phenolic Hard Hat With Fas Trac Ratchet Suspension
MSA475407

MSA Natural Tan Skullgard Phenolic Cap Style Hard Hat with Fas Trac Ratchet Suspension
MSA475395

MSA Tan Skullgard Fiberglass Cap Style Hard Hat with Fas Trac Ratchet Suspension
MSA475405
Size : L

MSA American Freedom Series V-Gard Protective Cap with Fast Trac III Suspension, Camouflage
MSA10103908

MSA V-Gard Cap Style Hard Hat - American Eagle Full Brim Hat with Fast Trac III Suspension, Camouflage
MSA10104254

Fibre Metal by Honeywell White Roughneck Fiberglass Cap Style Hard Hat with SuperEight 8point Ratchet Suspension
FIBP2ARW01A000

Fibre Metal by Honeywell Blue Roughneck Fiberglass Cap Style Hard Hat with SuperEight 3R 8 Point Ratchet Suspension
FIBP2ARW71A000

Fibre Metal by Honeywell Yellow Roughneck Fiberglass Cap Style Hard Hat with SuperEight 3R 8 Point Ratchet Suspension
FIBP2ARW02A000

Fibre Metal Thermoplastic Hard Hat
FIBE2RWX3

Fibre Metal Thermoplastic Hard Hat
FIBE2RWX1

FIBRE-METAL by Honeywell

MSA Plastic / Nylon Fas Trac III Replacement 4 Point Ratchet Suspension White Flush Rear Ear Attachment and 3 level Nape Strap for Use with Skullgard And Comfo Cap Helmets, Medium
#10153385

MSA Plastic / Nylon Fas Trac III Replacement 4 Point Ratchet Suspension White Flush Rear Ear Attachment and 3 level Nape Strap for Use with Skullgard Helmets, Large
#10126693

Ratchet Suspension

ITEM	See Use With
10126693	Skullgard (R) Large Size
10153385	Comfo and Skullgard (R)
10148706	V-Gard (R), Smooth Dome, V-Gard (R) 500, V-Gard (R) GREEN

Pyramex HPTRBAN Sweat Band

Hard Hat Terry Cloth Sweat Band
-HPTRBAN

PYRAMEX

Hard Hat Adapter

Honeywell Aluminum Cap mount Hard Hat Adapter, Universal
-HHAM

Pyramex Clear Face Shield
-S1010

Pyramex RidgelineRatchetSafety Headgear
HGB

RKSG201-CLEAR

RKSG201-SHADE

RK Safety Eyewear Transparent Crystal Clear Glasse 300 pcs case

ANSI Z87.1+ high impact standards

Slim Design that Fits over Prescription Glasses
Offers Comfort All Day Long While Providing 99.9% UV Protection
Durable Frame and Integral Lens Construction
Anti-scratch UV Absorbing Polycarbonate Lens Provides Outstanding Impact Strength and Optical Clarity for Rugged Industrial Protection

RKSG101

New

RK Heavy duty Industrial Chemical Splash Safety Googles, Glasses 200 pcs case

RK-GG101

ANSI Z87.1 CSA Z94.3

One Size Fits Most & Adjustable Straps for Secure Fit and Comfort
Chemical Safety Goggles with Clear, Fog Free Lens
Wide, Clear Field of Cision and Can Be Worn with Most Half-Mask Respirators
Designed for Maximum Protection Against Particles, Chemical Splash and Moderate Impacts

RK Safety Industrial Heavy duty Industrial Protective Indirect Vent Wide-Vision Safety Goggles, Glasses 120 pcs case

ANSI Z87.1 & CE EN166 Cerification

- One Size Fits Most
- High Safety Goggle with Indirect Ventilation Hole
- Lightweight, Durable, Anti - Fog, Anti
- Scratch & Impact Resistant
- Clear Spherical PC Lens Offer Wide View
- High impact standards

RK-GG203

RK-GG201

RK-GG202

RK Safety Industrial Heavy duty Industrial Protective Indirect Vent Wide-Vision Safety Goggles, Glasses

- High-impact polycarbonate
- Scratch-resistant lens
- Provides 99.9% UV protection
- Lightweight wrap-around lens
- Soft adjustable nose piece provides grip and comfort
- Meets ANSI Z87.1-2015

RK533-BLUE

RK532-YELLOW

RK530-CLEAR

RK535-BLUE MIRROR

RK534-MIRROR

RK531-SHADE

BETTER GRIP®

BGCR Cut Resistant Gloves

2 pairs / pack | 144 pairs / case

Availablesizes : S | M | L | XL

BETTER GRIP®

3 pairs / pack | 72 pairs / case

Item	Color	Size	Qty		
BGWLAC-OR	Orange	M, L, XL	3 PAIRS/ PACK	24 PARIS/ CASE	72 PAIRS
BGWLAC-BLU	Blue	M, L, XL	3 PAIRS/ PACK	24 PARIS/ CASE	72 PAIRS
BGWLAC-MT	Military	M, L, XL	3 PAIRS/ PACK	24 PARIS/ CASE	72 PAIRS
BGWLAC-LM	Lime	M, L, XL	3 PAIRS/ PACK	24 PARIS/ CASE	72 PAIRS

BGWLAC Winter Insulated Rubber Latex Coated Work Gloves Crinkle Patterninter Sandy Nitrile

BGWLAC-OR

BGWLAC-BLU

BGWLAC-LM

BGWLAC-MT

Insulated

3M Earplugs 1100
3M 1100

200 BOX

3M Earplugs, Cored 1100
3M 1100

100 BOX

3M | HOWARD LEIGHT by Honeywell | PYRAMEX

RK-EM02BK

Over-The-Head Folding-Padded Earmuffs

1011601

Cap-Mounted Thunder T1H Earmuffs

RK-EM01BK

Over-The-Head Folding-Padded Earmuffs

RK-EM01WH

Over-The-Head Folding-Padded Earmuffs

RK Safety Utility Multipurpose Catcher Clip, Hard Hat Belt Hook Clip

Accesory, Utility Catcher Clip Attatchment for Hard Hats, Ear Muff Clip, Ear Protection Clip, with Belt Clip

Slide the belt clip over your belt, pocket or waistband
Convenient way to keep up with a hard hat or other items when not in use
Snaps into place to hold your items securely such as Hard Hat, Ear Muff, Ear Protection, Cable, Mask, Rope
Formally known as the Helmet Catcher Clip, But Multipurpose Catcher Clip

Catcher clip RED Catcher clip OR Catcher clip YEL

Catcher clip LM Catcher clip BL Catcher clip BK

3M Particulate Respirator 8210, N95

8 box case

3M8210

This classic disposable N95 particulate respirator is designed to help provide comfortable, reliable worker respiratory protection against certain non-oil based particles.

- NIOSH approved for at least 95 percent filtration efficiency against certain non-oil based particles
- Two-strap design with welded dual point attachment helps provide a secure seal
- Cushioning nose foam
- Adjustable nosedip helps provide a custom fit and secure seal
- Lightweight construction promotes greater worker acceptance and may help increase wear time
- Advanced electrostatic media is designed for ease of breathing

3M Particulate Respirator 8511, N95

8 box case

3M8211

This disposable N95 particulate respirator features the proprietary 3M™ Cool Flow™ Valve and helps provide comfortable, reliable worker respiratory protection. It is ideally suited for hot/dusty work settings that require long periods of wear.

- NIOSH approved for at least 95 percent filtration efficiency against certain non-oil based particles
- 3M Cool Flow Exhalation Valve reduces heat build-up inside the respirator
- Adjustable M-nosedip reduces potential for eyewear fogging
- Braided headbands two-strap design with dual point attachment helps provide a secure seal
- 3M Cool Flow Exhalation Valve reduces heat build-up inside the respirator

N95 Particulate Respirator RK-9610

12 box case

RK-9610

- 95% Efficient Respiratory Protection in Non-Oil Areas
- Maintenance-Free Construction
- Adjustable Nose Clip with Foam Strip to Reduce Potential for Eyewear Fogging
- Latex-Free Stapled Fixed Head Strap
- Meets NIOSH Approval TC-84A-3888

N95 Valved Particulate Respirator 9611

12 box case

RK-9611

- 95% Efficient Respiratory Protection in Non-Oil Areas
- Exhalation Valve For Easy Breathing
- Maintenance-Free Construction
- Adjustable Nose Clip with Foam Strip to Reduce the Potential for Eyewear Fogging
- Latex-Free Stapled Head Strap
- Meets NIOSH Approval TC-84A-3889

NORTH by Honeywell

North Respiratory Protection has been proven to help protect workers from life-threatening hazards ranging from gases and vapors to airborne particulates and pathogens.

Item.	7580P100	7583P100L	75SCL
Name	North 7580P100 Particulate Cartridge	North Safety 7583P100L	Organic Vapor / Acid Gas & P100 Filter Cartridge	North 75SCL Defender Multi-Purpose Cartridge
Use with	North Full or Half Mask Respirators	5400 Series, 5500 Series, 7600 Series and 7700 Series respirators.	Fits all North respirators and North APR facepieces without adapters.

Item.	54001	77030M / 77030L	550030M / 550030L
Name	North 54001 Full Respirator Facepiece, Medium/Large	Honeywell North 7700 Series Half Mask Facepiece, Black Silicone	North Safety 5500 Series Low Maintenance Half Mask Respirator
Available Sizes	One Size (M/L)	- Medium - Large	- Medium - Large
Use with	North 5400 Series Full Facepieces are compatible with all North cartridges, filters and accessories (sold separately)	7580P100 7583P100L 75SCL	7580P100 7583P100L 75SCL

3M

Products that work as hard as you do. From the most basic to the most specialized needs, 3M offers the health and safety protection you and your workers need most, so everyone can perform at their best.

Item.	3M 2071	3M 2091	3M 5N11	3M 6001	3M 6006
Name	Particulate Filter 2071, P95 Respiratory Protection	Particulate Filter 2091/07000(AAD), P100 Respiratory Protection	Particulate Filter 5N11, N95 Respiratory Protection	Organic Vapor Cartridge 6001, Respiratory Protection	Multi Acid Gas/Organic Vapor Cartridge 6006, Respiratory Protection
Use with	3M™ Respirators 5000 Series or Cartridges 6000 Series with 3M™ Adapter 502, 3M™ Facepieces 6000 Series, or 3M™ Facepieces 7000 Series with bayonet filter holders.	Many 3M™ half and full facepiece reusable respirators	3M™ Respirators 5000 Series or 3M™ Cartridges 6000 Series, and 3M™ Filter Retainer 501.	3M™ Half and Full Facepieces 6000 Series and 3M™ Half and Full Facepieces 7000 Series with bayonet style cartridge holders.	3M™ Half and Full Facepieces 6000 Series and 3M™ Half and Full Facepieces 7000 Series with bayonet style cartridge holders.

3M Full Facepiece Reusable Respirator 6800, Respiratory Protection, Medium

3M6800

- 3M™ Cool Flow™ Valve for cooler, drier comfort
- Lightweight, well-balanced design with silicone faceseal for enhanced comfort and durability
- Air purifying respirator (APR), supplied air (SA) and powered air purifying respirator (PAPR) modes
- For use with 3M™ Cartridges 6000 Series; 3M™ Filters 2000, 2200, 7000 or 5000 Series; or 3M™ Dual Airline Systems against a variety of gases, vapors and particulate hazards according to NIOSH approvals

3M Half Facepiece Reusable Respirator

3M 6200 - Medium Size
3M 6300 - Large Size

This half facepiece reusable respirator offers reliable and convenient respiratory protection and is suitable for many situations, helping provide protection against particulates and a wide variety of gases and vapors according to NIOSH approvals.

- Compatible and convenient respiratory protection
- Half facepiece reusable respirator

DuPont® ProShield Basic PB122S Coverall with Standard Fit Hood and Attached Skid-Resistant Boots, Disposable, Elastic Cuff

25 case

PB122SBU

PB122SWH

Product Features:

-Lightweight spunbond-meltblown-spunbond (SMS) fabric
-Comfort and quality at an affordable price
-Optimized for comfort with soft fabric and excellent breathability
-Roomy garment using DuPont's unique comfort fit design

-Available in white and blue color

Available sizes:

S	M	L	XL	2XL	3XL	4XL

RK Safety Professional Elite Gel Knee pads

Perfect Fit : Easily Adjustable for a Tight, Secure Fit
Superior All-Day Comfort : Premium Gel Technology Distributes Weight Throughout The Pad To Reduce Knee Fatigue.
Superior Safety & Protection : The Knee Pads, Heavy-Duty, Hard Shell is Ideal for All Types of Indoor & Outdoor Projects
Real Knee Savers : Don't Be Fooled By Other "Me-Too" Knee Pads. Surround Your Knees In Comfort With Superior 18mm Thick High Density Closed-Cell Foam Padding & Layered Gel Cushioning. It's Like Kneeling On Two Big Gel Pillows. There Is A Noticeable Difference. Don't Sacrifice Your Knees.

-Available sizes : One Size Fits All

RKKP11

RKKP12

RKKP21

RK Premium Quality Elastic Back Support Belt

Includes Adjustable / Detachable Suspenders
7.5 Inch Elastic Body For Durability
Adjustable Two-Stage Closure Straps Provide Customized Fit and Compression
Permits full range of movement while providing comfortable support
Helps relieve muscle pain, promote faster healing and improve joint flexibility and health.

-Available sizes :

S	M	L	XL	2XL	3XL	4XL

RKBST11

Extra Wide Over-The-Shoe Work Slush Boot

6pair Box

Features:
- 17" rubber boot
- 100% waterproof flexible rubber

Sizes
10-17

RK-OVRSB

Boot and Shoe Cover

12 Inch Waterproof Shoe Cover

50EA Box

A352

Rain Gears, 2-pieces Set

10EA Box

SIZE: M - 3XL

RC500

Rain Gears, 3-pieces Set

10EA Box

• SIZE: S - 5XL

RW300

Rain Suit, 2-pieces Set

• SIZE: S - 4XL

RKRC11-LM

Disposable Shoes Covers

(Large size - up to US Men's 11 US Women's 12.5)

One Size Covers for Construction Painting
Indoor Carpet Floor Protection
Medical Workplace. 500 Pairs Case

SHOE-C-BLU

SHOE-C-WHT

RAIN GEAR

Multi-Use Head Wrap-Two Tone 100 pcs Case

RK-MWCAP

Leg Gaiters Two Tone Lime/Orange
Pair / Pack 100 pcs Case

- Polyester Oxford w/ PU Coating
- One Size Fits all, 16" long
- Adjustable Closure Width with 3 pcs of Hooks & Loops
- Hook & Loop is 4" Long
- Elastic Top & Bottom
- Reflective Tape for visibility

RK-GAITER-OR

RK-GAITER-LM

Hi Vis Thermal Lined Waterproof Trousers

10pcs Box

ANSI/ISEA

Available Size : S | M | L | XL | 2XL | 3XL | 4XL | 5XL

Button Closure

Thermal Lining

- 2" Silver Reflective Tape for Increased Visibility in Low Light Conditions
- Elasticated Waist for Extra Comfort
- Thermal Lined

RK-WP0212

RK-WP0211

Hi Viz Waterproof Raincoat ANSI /ISEA 107-2015

12 pcs Box

- 5cm Silver Tape
- 100% Poly oxford PU Coated in Hi-Vis Yellow 1500
- 60gsm 100% Poly Mesh
- ANSI/ISEA 107-2015, Class 3
- Long Coat Pack with Storage Bag w/ Zipper

Detachable Snap w/ Hood

Chest Pocket

Bottom Pocket

RC-CLA3-LM22

Available Size : S | M | L | XL | 2XL | 3XL | 4XL | 5XL

Hi Viz Waterproof Rain Suit ANSI /ISEA 107-2015

12 pcs Box

- 5cm Silver Tape
- 100% Poly oxford PU Coated in Hi-Vis Yellow 1500
- 60gsm 100% Poly Mesh
- ANSI/ISEA 107-2015, Class 3
- Top & Bottom Pack with Storage Bag w/ Zipper

Mesh Fabric

Hidden Hood

RW-CLA3-LM11

Available Size : S | M | L | XL | 2XL | 3XL | 4XL | 5XL

RK Safety Hi Viz Safety Rain Suit ANSI/ISEA 107-2015 Class 3

12pcs Box

- 5cm Silver Tape
- 100% Poly oxford PU Coated in Hi-Vis Yellow 1500
- 60gsm 100% Poly Mesh
- ANSI/ISEA 107-2015, Class 3
- Top & Bottom Pack with Storage Bag w/ Zipper

RW - CLA3-TLM 55

RW-CLA3-TOR 77

Available Size : S | M | L | XL | 2XL | 3XL | 4XL | 5XL

RK Safety Hi Viz Safety Raincoat ANSI/ISEA 107-2015 Class 3

12pcs Box

- 5cm Silver Tape
- 100% Poly oxford PU Coated in Hi-Vis Yellow 1500
- 60gsm 100% Poly Mesh
- ANSI/ISEA 107-2015, Class 3
- Top & Bottom Pack with Storage Bag w/ Zipper

RC - CLA3-TLM 66

RC-CLA3-TOR 88

Available Size : S | M | L | XL | 2XL | 3XL | 4XL | 5XL

RK 3pc PVC Rain Suit Yellow

12 pcs Box

Available Size : S | M | L | XL | 2XL | 3XL | 4XL

- PVC 35% Polyester 65%
- Durable
- Easy to Use
- Detachable Drawstring Hood
- Drawstring Elastic Waist Pants
- Storm Front Jacket with Doulbe Fly Snap
- Full cut size to fit over clothing

RW-PP-YEL33

RW-PP-NVY33

RW-PP-HIG33

RK 2pc PVC Rain Coat Yellow

20 pcs Box

Available Size : S | M | L | XL | 2XL | 3XL | 4XL

- PVC 35% Polyester 65%
- Durable
- Easy to Use
- Detachable Drawstring Hood
- Storm Front Jacket with Doulbe Fly Snap
- Long Coat w/ Hood

RC-PP-YEL44

RC-PP-NVY44

RC-PP-HIG44

BETTER GRIP®

3 pairs / pack | 72 pairs / case

Winter Crinkle Finished Latex Dip Nylon Work Gloves - 3/4 Latex Coated

Item	Velcro WristBand	Color	Sizes	QTY		
BGWLAC3/4-LM		Lime	M, LG, XL	3 PAIRS/PACK	24 PACK/ CASE	72 PAIRS
BGWLAC3/4-OR		Orange	M, LG, XL	3 PAIRS/PACK	24 PACK/ CASE	72 PAIRS
BGWLAC3/4V-LM	✓	Lime	M, LG, XL	3 PAIRS/PACK	24 PACK/ CASE	72 PAIRS
BGWLAC3/4V-OR	✓	Orange	M, LG, XL	3 PAIRS/PACK	24 PACK/ CASE	72 PAIRS

BGWLAC3/4-LM

BGWLAC3/4-OR

BGWLAC3/4V-LM

BGWLAC3/4V-OR

10 gauge hi-viz nylon shell | Crinkle Finished | Elastic slip-on cuff | Lining 10 gauge hi-viz nylon shell | Crinkle Finished | Velcro wrist band | Lining

BETTER GRIP®

3 pairs / pack | 72 pairs / case

Better Grip BGWANS3/4 Safety Winter Insulated Double Lining Rubber Latex 3/4 Coated Work Gloves

Item	Color	Sizes
BGWANS3/4-BK	Black	M / L / XL
BGWANS3/4-OR	Orange	M / L / XL
BGWANS3/4-LM	Lime	M / L / XL

Insulated

BGWANS3/4-BK

BGWANS3/4-LM

BGWANS3/4-OR

RK Waterproof PVC Boots

6 pairs Case

- Material: Natural Rubber, Polyester
- Waterpvroof
- Oilproof
- Acidproof
- Alkaliproof
- Full lined artificial fur insulated (RKBW)

High quality rain boots made of 100% Natural Rubber, comfort and durable. Injection molded, seamless construction for 100% waterproof.

Insulated

RKBW-BLK

RKBW-YEL

RKBS-YEL

RKBS-BLK

OILPROOF ACIDPROOF ALKALIPROOF

Item	Color	Size	Lining	Qty
RKBW-BLK	Black	US Men's : 6 - 13	✓	6 Pairs / case
RKBW-YEL	Yellow	US Men's : 6 - 13	✓	6 Pairs / case
RKBS-BLK	Black	US Men's : 6 - 13		6 Pairs / case
RKBS-YEL	Yellow	US Men's : 6 - 13		6 Pairs / case

SEVUS by Honeywell

Men's 14 Inch USA Made Waterproof PVC Boots 18822/ 18821

Soft Toe/ Steel Toe

Color: Black
Waterproof: Waterproof Const.
Padded Collar: Not Padded
Gender: Unisex
Sole Material: Rubber
Tread Pattern: Aggressive
Toe Type: Safety Toe / Non Safety Toe
Style: Pull On
Sole Construction: Cement (Flexible)
Footwear Width: Medium

- The unique Trac10 sole design enhances traction and durability with an ergonomic frame design and interior lugs
- The contour heel cup molding reduces heel slippage while the EVA FOOT FORM provides sneaker-like comfort for all-day wear
- Sleek and contemporary, the CT Knee Boot is a great choice for general industrial conditions

Comfort Technology offers a unique scalloped top-line design to accommodate flexing in the calf area to reduce irritation

Made In the U.S.A.

SRV18822-Soft Toe
SRV18821- Steel Toe

Item	Color	Available Sizes	Height	Toe Type	QTY
SRV1822	Black	US Men's Size 6 - 13	15-Inch	**Soft Toe**	6 pairs/ case
SRV18821	Black	US Men's Size 6 - 13	15-Inch	**Steel Toe**	6 pairs/ case

NOTICE
STEEL TOE SHOES
REQUIRED IN THIS AREA

RK Industrial Waterproof Light-Weight PVC Vinyl Apron (Navy/Yellow)

Ties traps at neck and waist. (27" Tie Length each side)
High Quality and Light Weight PU Vinyl
Finished Size: 47" Long, 35" Wide
Waterproof
Made in Korea

APRON-4010 APRON-4050

RK Industrial Kitchen Apron Bib WaterProof Urethane (White/Light Blue/Grey)

Urethane
Imported
Easy Washable, Durable and Heat-resistant

High Quality and Light-Weight Urenthane
Perfect Waterproof
Finished Size: 36" Long, 25" Wide
Made in Korea

APRON-5000 APRON-4040 APRON-4030

FIRST AID KIT / EYE WASH STATION

Genuine First Aid® ANSI 10-Person Kit

Meets ANSI Z308.1-2009

These plastic kits contain all the items required to meet ANSI Z308.1-2009 specifications. Contents are organized via the Easy Access Pocket System, which makes your kits much faster and easier to use - which is vital when you don't have the time to go through everything in your kit. In case of an accident or emergency requiring first aid, simply fold out the clearly labeled pockets and open the one you need for the emergency at hand.

Genuine First Aid® ANSI 25-Person Kit

Meets ANSI Z308.1-2009

These plastic kits contain all the items required to meet ANSI Z308.1-2009 specifications. Contents are organized via the Easy Access Pocket System, which makes your kits much faster and easier to use - which is vital when you don't have the time to go through everything in your kit. In case of an accident or emergency requiring first aid, simply fold out the clearly labeled pockets and open the one you need for the emergency at hand.

Genuine First Aid® ANSI 50-Person Kit

Meets ANSI Z308.1-2009

These plastic kits contain all the items required to meet ANSI Z308.1-2009 specifications. Contents are organized via the Easy Access Pocket System, which makes your kits much faster and easier to use - which is vital when you don't have the time to go through everything in your kit. In case of an accident or emergency requiring first aid, simply fold out the clearly labeled pockets and open the one you need for the emergency at hand.

SAS Safety 5132 Personal Eyewash Station

Emergency Eye Wash Station

- *Dual-bottle eyewash station for temporary first-aid until victim can reach a larger unit*
- *Durable plastic station available includes two 16-Ounce bottles*
- *Bottles have twist-off tops*
- *Directions printed on station for fast reference*

RATCHET

Axle Strap 2" x 36" - Tie Down Your Vehicle to a Trailer with Heavy Duty Straps

40 pcs Case

Break Strength : 10,000 Lbs
Working Load : 3,333 Lbs

NK-AS2X36

2" x 6" ETrack Rope Tie Offs - For Cargo Trailers, Enclosed Vans

60 pcs Case

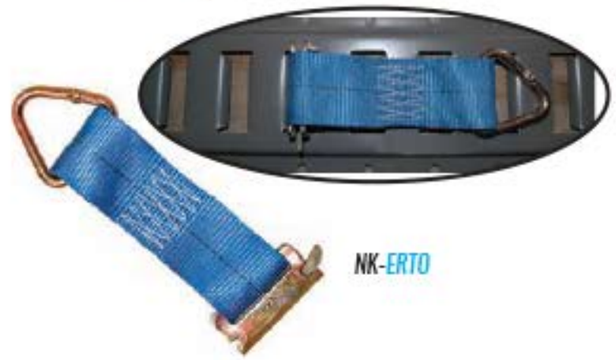

NK-ERTO

Ratchet Tie Down Straps - 4Pk Camuckle Alternative

Cargo Straps for Moving Appliances, Lawn Equipment, Motorcycle

Break Strength : 3,000 Lbs
Working Load : 1,000Lbs

4 pcs Case

NK-R154PK

Blue Ratcheting E-Track Logistic Strap

The Ratchet Strap Tie Downs Work Great for Securing Cargo for Transport Ratcheing System to Tighten Strap acound Cargo

20 pcs Case

NK-RCE2x16
NK-RCE2x12
NK-RCE2x20

2" x 27' Ratchet Strap for Cargo

with Flat Hook and Long/Wide Handle Webbing with Printing

10 pcs Case

NK-RCF2x27

2" x 27' Heavy Duty Ratchet Tie-Down Strap

with Double J Hooks

Break Strength : 10,000 Lbs
Working Load : 3,333 Lbs

10 pcs Case

NK-RCJ2x27

Retractable Ratcheting Tie-Down Strap

NK-RR1x10-2PK 6 Pk Case
Pack of 2, 1" x 10'

NK-RR1x10-4PK 3 Pk Case
Pack of 4, 1" x 10'

NK-RR2x10-2PK
Pack of 2, 1" x 10'

E Track 2" O Rings Tie Down Standard Duty

100 pcs Case

NK-ETOR2

1" x 10" Soft Loop Tie Down Straps

1,200 lbs

Loops for Securing ATV, UTV, Motorcycles, Scooters, Dirt Bikes, Lawn & Garden Equipment 500 pcs Case

NK-STRAP1x10

4" x 30' Yellow Winch Strap (Single)

with Flat Hook, Webbing with Printing

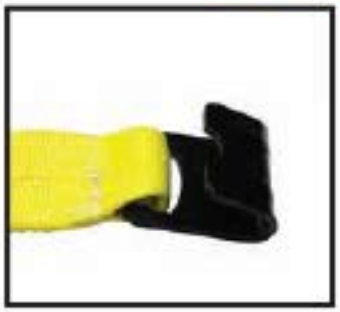

NK-WST4x30

Load Limit 5,400 Lbs
Assembly Break Strength 16,200 Lbs